FIG. 1

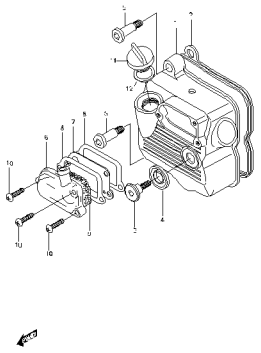

FIG. 2

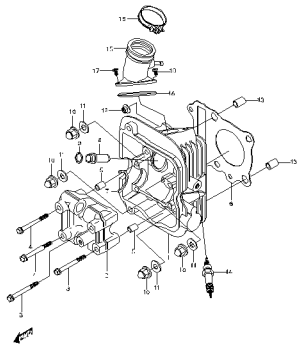

FIG. 3

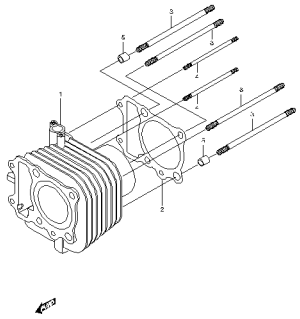

FIG. 4

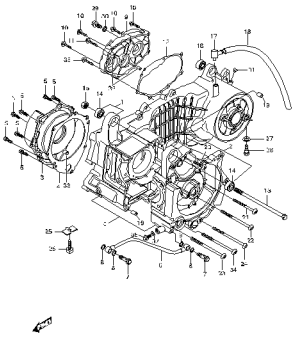

FIG. 5

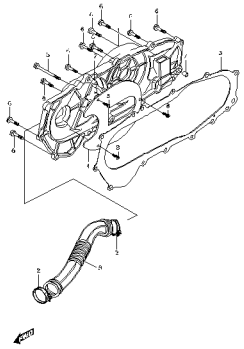

FIG. 6

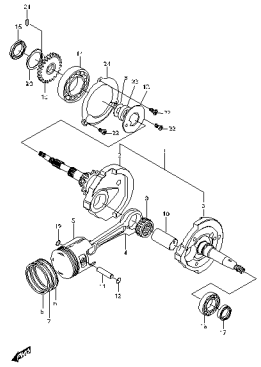

FIG. 7

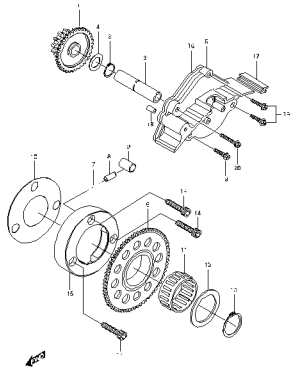

FIG. 8

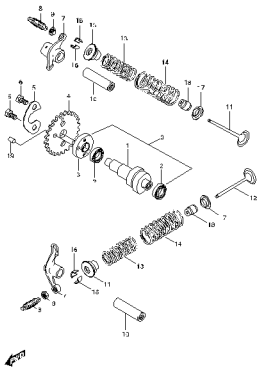

FIG. 9

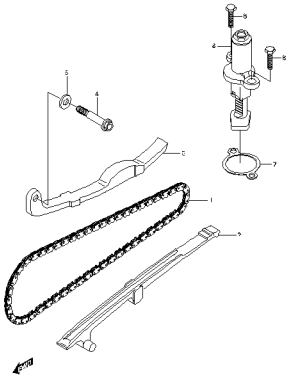

FIG. 10

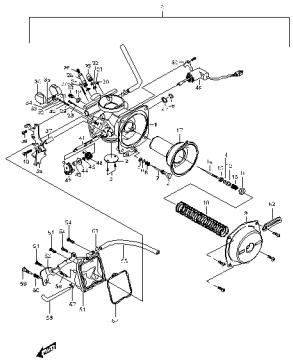

FIG. 11

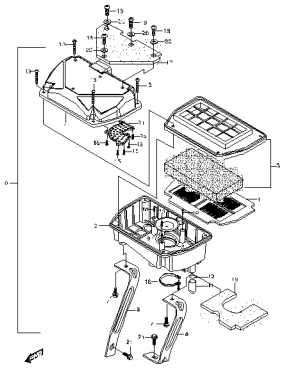

FIG.12

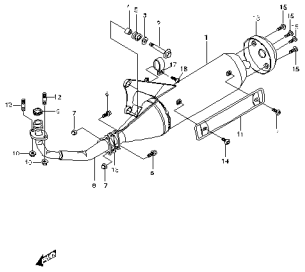

FIG. 13

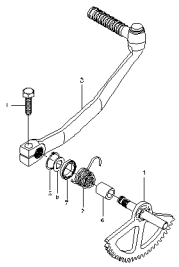

FIG. 14

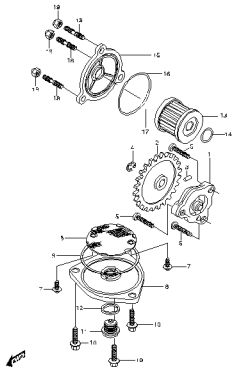

FIG. 15

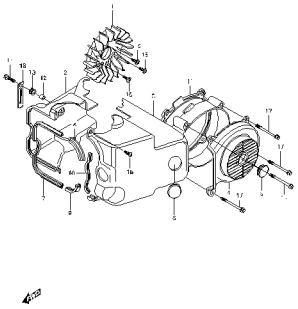

FIG. 16

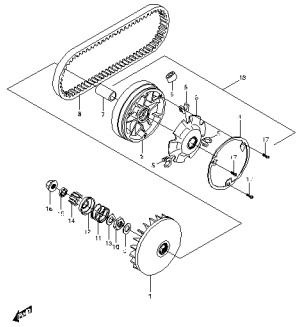

FIG. 17

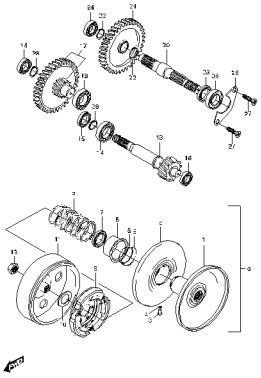

FIG. 18

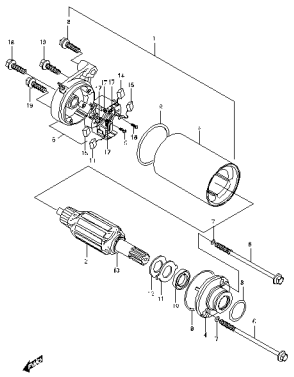

FIG. 19

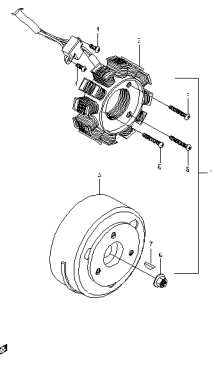

FIG. 20

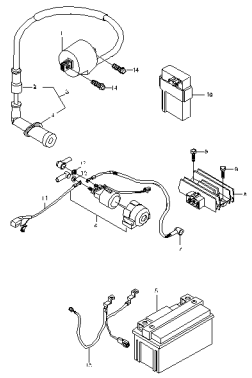

FIG. 21

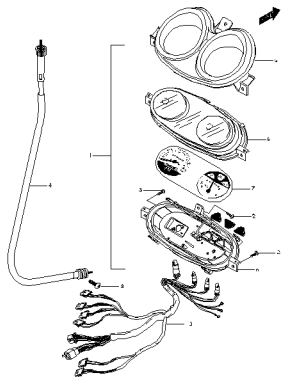

FIG. 22

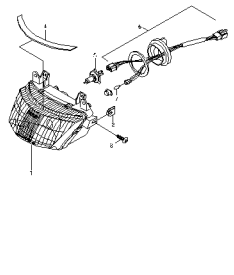

FIG. 23

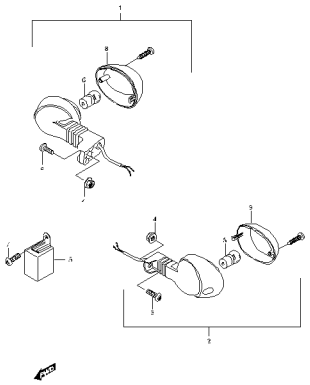

FIG. 24

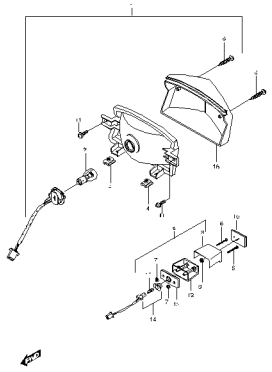

FIG. 25

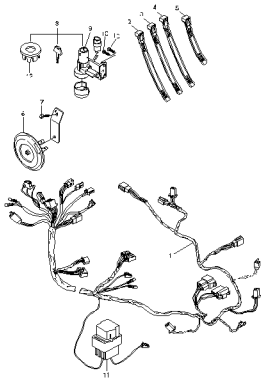

FIG. 26

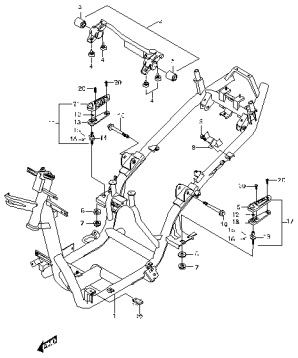

FIG. 27

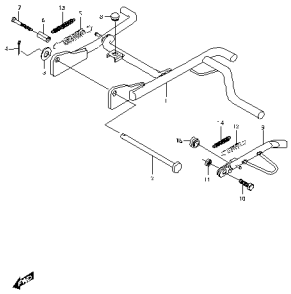

FIG. 28

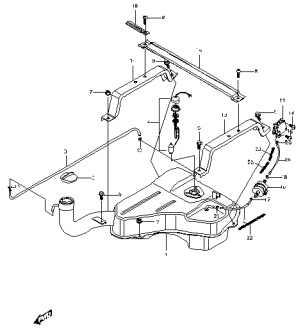

FIG. 29

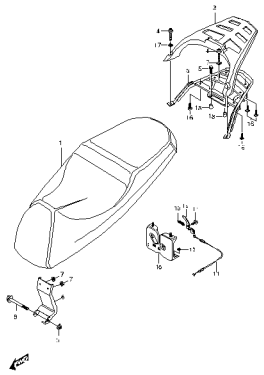

FIG. 30

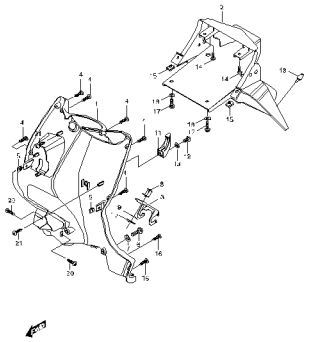

FIG. 31

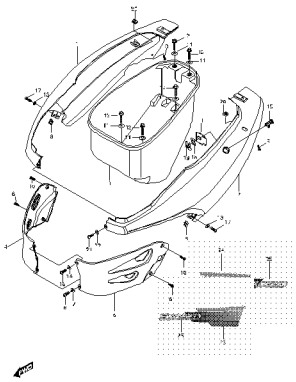

FIG. 32

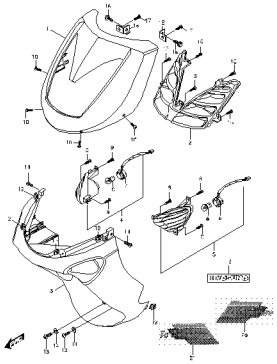

FIG. 33

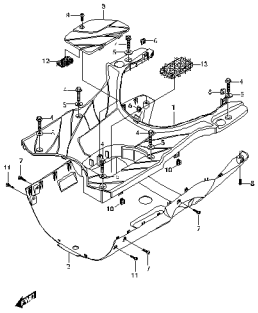

FIG. 34

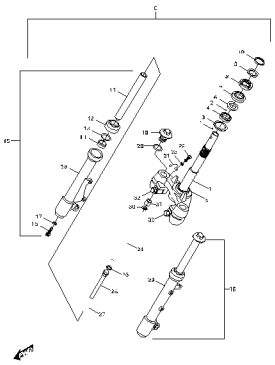

FIG. 35

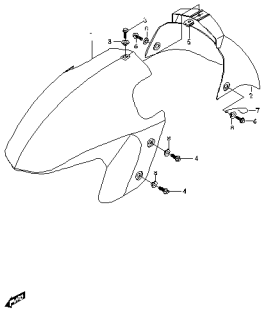

FIG. 36

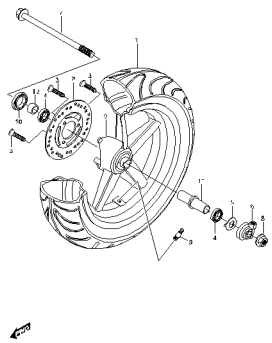

FIG. 37

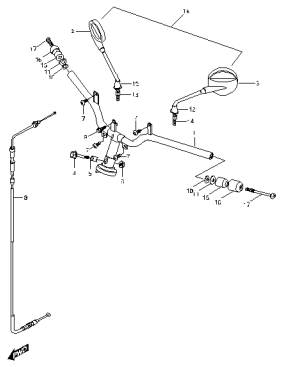

FIG. 38

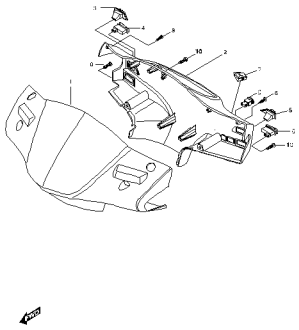

FIG. 39

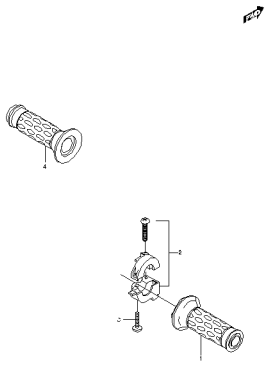

FIG. 40

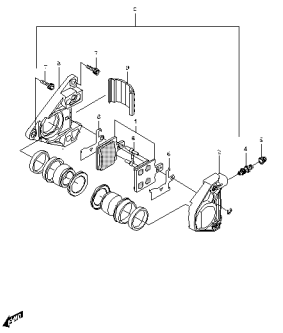

FIG. 41

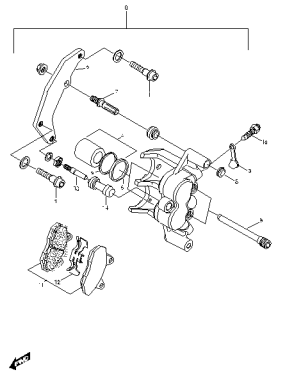

FIG. 42

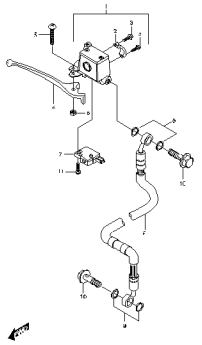

FIG. 43

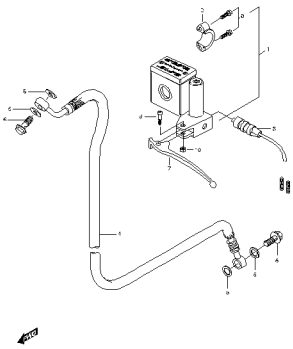

FIG. 44

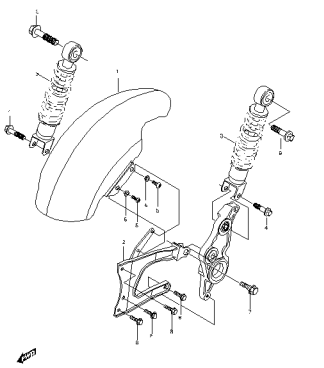

FIG. 45

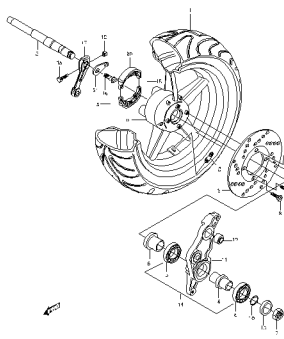

FIG. 46

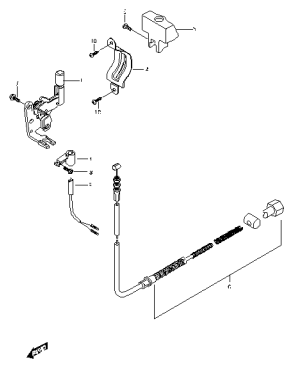

FIG. 1

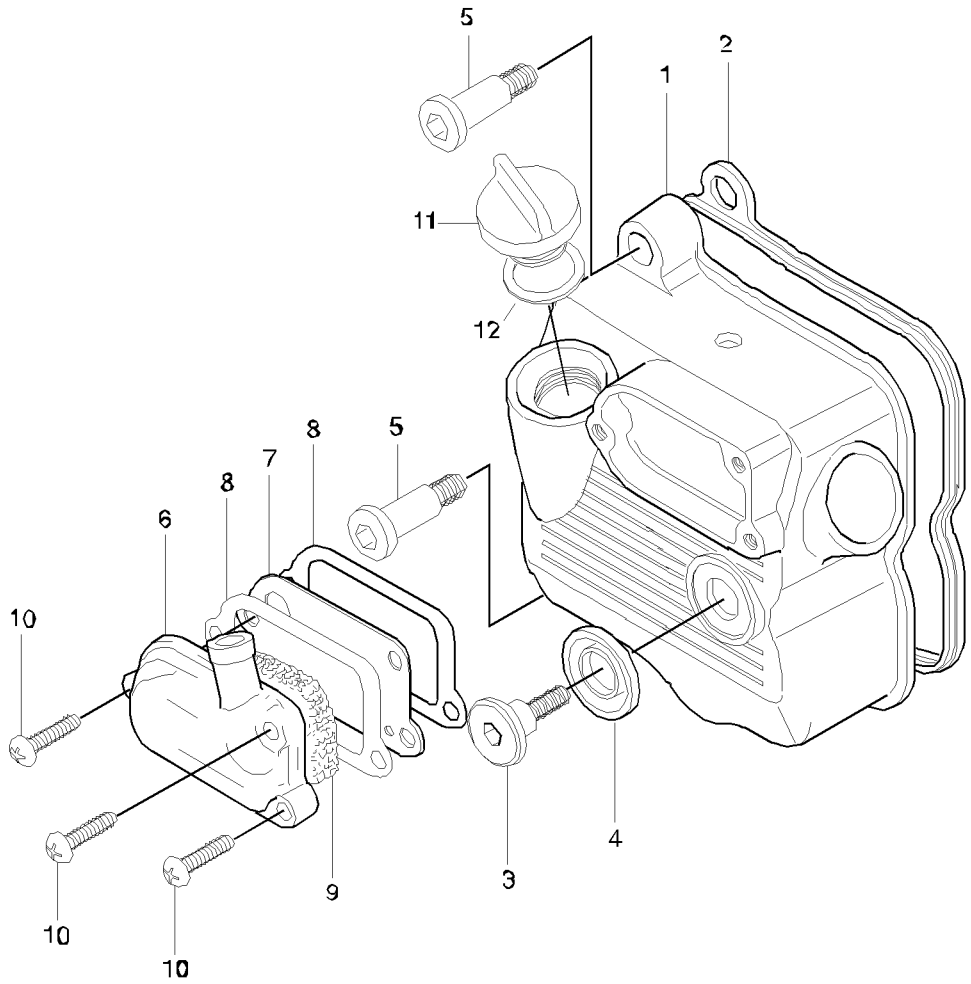

FIG. 1 CYLINDER HEAD COVER

REF. No.	PARTS NUMBER	PARTS NAME	Q'TY
01-01	11171HF4506	COVER, cylinder head	1
01-02	11173HF4502	GASKET, cylinder head cover	1
01-03	09106-07009	BOLT, cylinder head cover No.1(M7x17.5)	1
01-04	09161H11008	WASHER, cylinder head cover	1
01-05	09106H07017	BOLT, cylinder head cover No.2(M7x31)	2
01-06	11176HF4500	COVER, breather	1
01-07	11178HF4500	GASKET, breather cover No.1	1
01-08	11179HF4500	GASKET, breather cover No.2	2
01-09	11186HF4500	SEPARATER, oil breather	1
01-10	02112-15205	BOLT, breather cover(M15x20)	3
01-11	09259-2000903P	PLUG, engine oil filler	1
01-12	09280-17003	O-RING, engine oil filler plug	1

FIG. 2

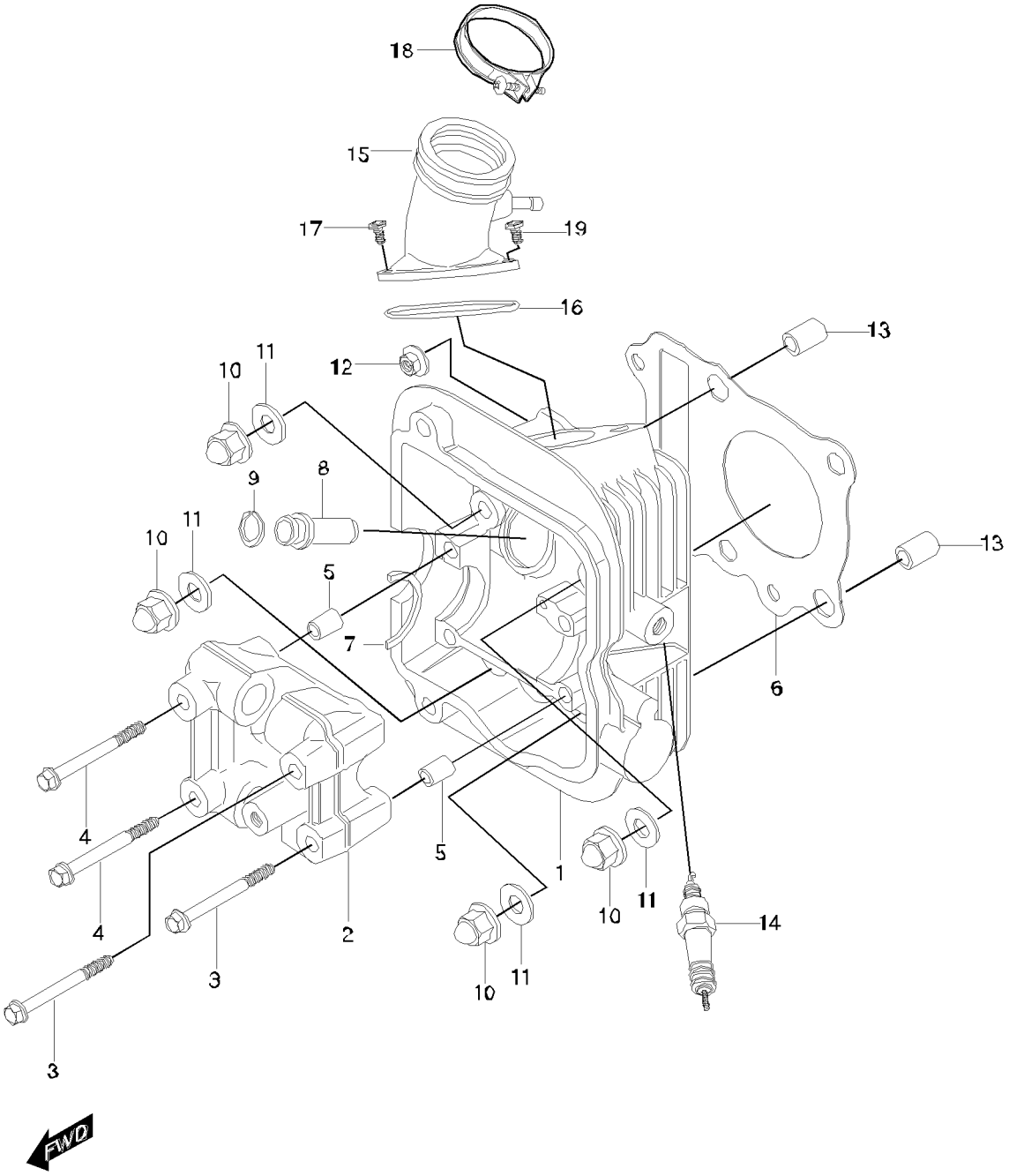

FIG. 2 CYLINDER HEAD

REF. No.	PARTS NUMBER	PARTS NAME	Q'TY
02-01	11110HL7301PCH	HEAD COMP, cylinder	1
02-02	11121HF4501PCH	HOUSING, camshaft	1
02-03	01517-06505	BOLT, camshaft housing No.1(M6x50)	2
02-04	01517-06605	BOLT, camshaft housing No.2(M6x60)	2
02-05	09206-08001	KNOCK PIN, camshaft holder	2
02-06	11141HL7300	GASKET, cylinder head	1
02-07	09390H32001	C-RING, camshaft	1
02-08	11115HF4500	GUIDE, valve	2
02-09	09381-10004	SNAP RING, valve guide	2
02-10	09159-08049	NUT, cylinder head stud(M8)	4
02-11	09168-08021	GASKET, cylinder head nut	4
02-12	08316-16068	NUT, cylinder(M6)	2
02-13	04213-11129	KNOCK PIN, cylinder	2
02-14	09482-01144	PLUG, spark(DR8EA)	1
02-15	13110HL7303	PIPE COMP, intake	1
02-16	09280-32006	O-RING, intake pipe	1
02-17	02122-06168	SCREW, intake pipe(M6x16)	1
02-18	09402-44207	CLAMP, intake pipe	1
02-19	09128-06005	SCREW, intake pipe(M6x16	1

FIG. 3

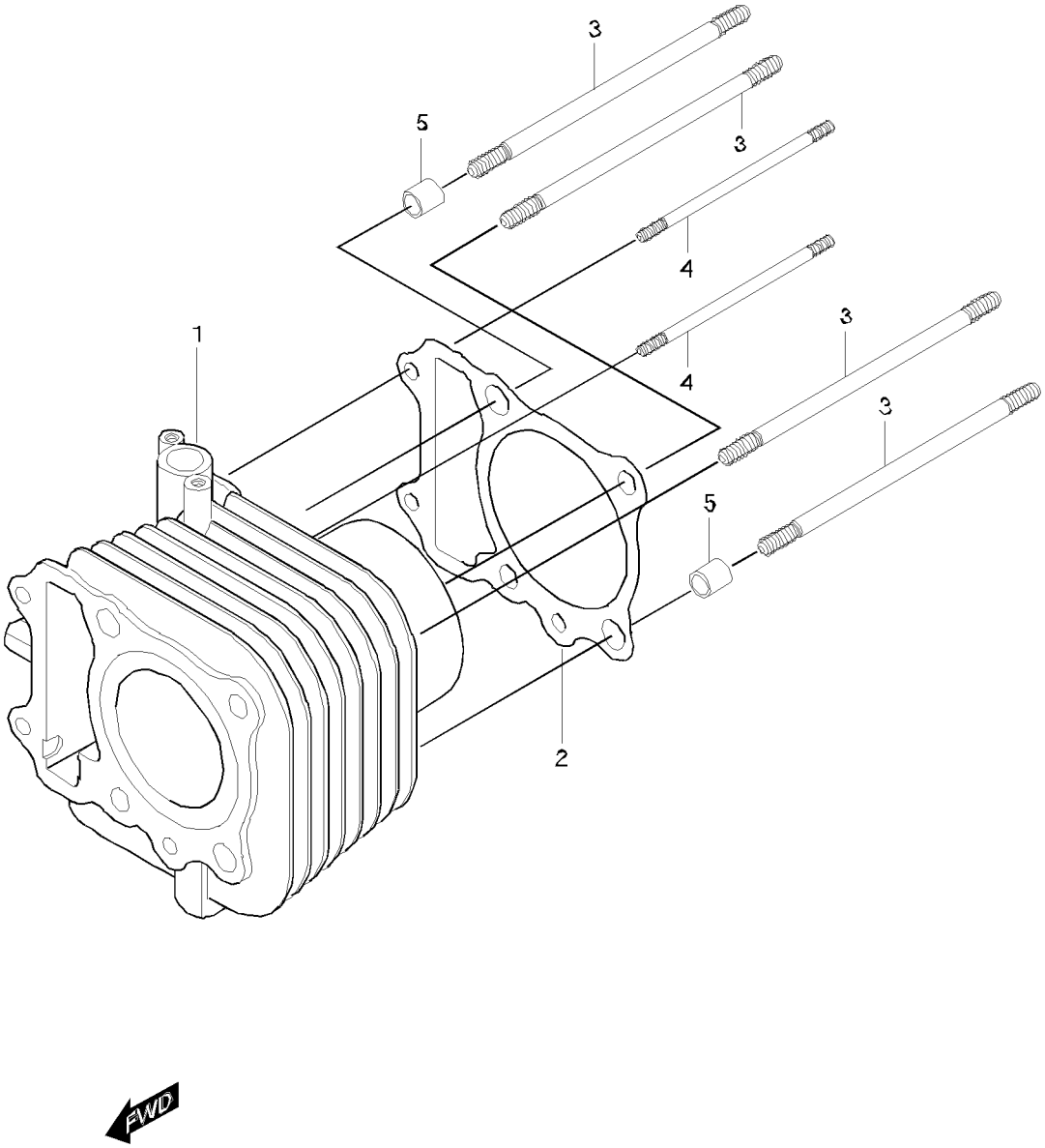

FIG. 3 CYLINDER

REF. No.	PARTS NUMBER	PARTS NAME	Q'TY
03-01	11210HL7301PCY	CYLINDER COMP	1
03-02	11241HF4501	GASKET, cylinder	1
03-03	09108H08072	BOLT, cylinder head stud	4
03-04	01421-06958	BOLT, cylinder stud(M6x95)	2
03-05	04213-11149	KNOCK PIN, cylinder	2

FIG. 4

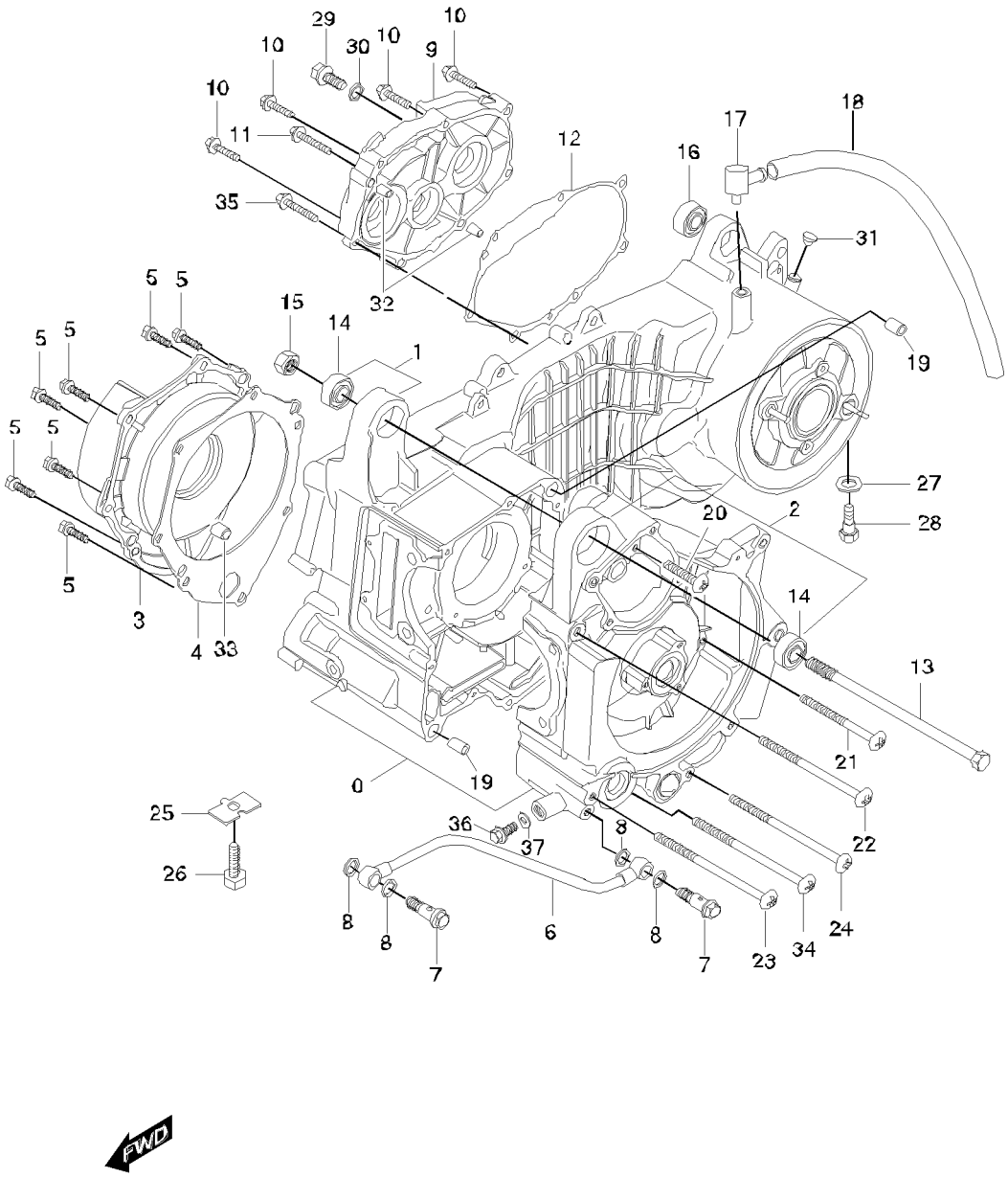

29
10
30
10
9
10
10
11
12
17
18
16
35
31
32
5
5
15
14
1
19
5
5
5
5
27
20
2
28
5
3
4
33
14
13
21
0
19
25
36
37
8
22
26
8
8
6
8
7
7
23
34
24
FWD

FIG. 4 CRANKCASE & GEAR BOX COVER

REF. No.	PARTS NUMBER	PARTS NAME	Q'TY
04-00	11300HL7302	CRANKCASE ASS'Y	1
04-01	11310SL7303HPA	CRANKCASE R ASS'Y	1
04-02	11320SL7302HPA	CRANKCASE L ASS'Y	1
04-03	11421HF4502PCR	COVER, crank shaft, R	1
04-04	11422HF4501	GASKET, crank shaft cover R(NA)	1
04-05	01547-06258	SCREW, crank shaft cover R(M6×25)	7
04-06	11280HF4501	PIPE COMP, oil	1
04-07	09360H10034	UNION, oil pipe	2
04-08	09168-08008	GASKET, oil pipe union upper	4
04-09	11431HF4504PCR	COVER, gear box	1
04-10	07120-06308	BOLT, gear box cover(M6x30)	5
04-11	07120-06408	BOLT, gear box cover(M6x40)	1
04-12	11484HF4502	GASKET, gear box cover(NA)	1
04-13	09100-12028	BOLT, engine mounting(M12x185)	1
04-14	09319-12036	BUSH, engine mounting	2
04-15	08310-11126	NUT, engine mounting(M12)	1
04-16	09319-10032	BUSH, rear shock absorber	1
04-17	16910-09401	UNION COMP, breather hose	1
04-18	09343H04001	HOSE, breather	1
04-19	04213-13189	PIN, crank case knock	2
04-20	02112-06308	SCREW, crank case(M6×30)	1
04-21	02112-06658	SCREW, crank case(M6×65)	3
04-22	02112-06758	SCREW, crank case(M6×75)	1
04-23	02112-06858	SCREW, crank case(M6×85)	1
04-24	02112-06958	SCREW, crank case(M6×95)	1
04-25	11319-05200	PLATE, oil gallery plug	1
04-26	01107-06106	BOLT, oil gallery plate(M6×10)	1
04-27	09168H10003	GASKET, T/M oil drain	1
04-28	09247-100A8	PLUG, oil drain	1
04-29	01514-08128	PLUG, oil lever	1
04-30	09168-08008	GASKET, T/M oil lever	1
04-31	09250H11005	PLUG, oil filler	1
04-32	04213-09129	PIN, gear box cover	2
04-33	04213-09129	PIN, crank shaft cover knock	2
04-34	02112-06908	SCREW, crankcase(M6×90)	2
04-35	07120-06358	BOLT, gear box cover(M6x35)	1
04-36	09247-100A8	PLUG, oil check	1
04-37	09161-10009	GASKET, oil check plug	1

FIG. 5

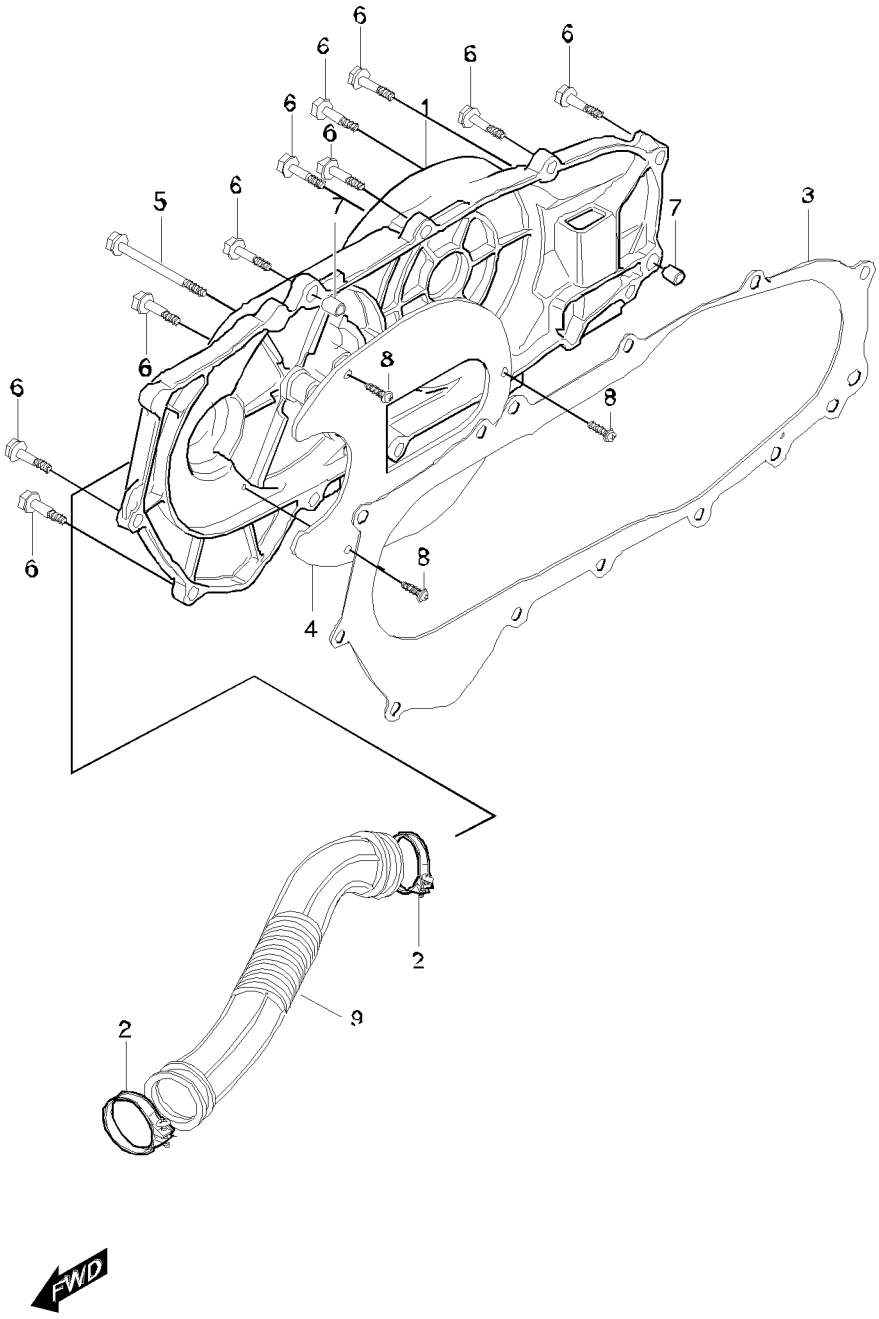

FIG. 5 CLUTCH COVER

REF. No.	PARTS NUMBER	PARTS NAME	Q'TY
05-01	11341HL7301999	COVER COMP, clutch	1
05-02	09402-36207	CLAMP, connecting tube	2
05-03	11485HF4500	GASKET, clutch cover(NA)	1
05-04	11346HF4500	PLATE, clutch cover air intake pipe	1
05-05	01547-06508	BOLT, clutch cover center(M6×50)	1
05-06	01547-06208	BOLT, clutch cover(M6x20)	11
05-07	04213-13189	PIN, clutch cover knock	2
05-08	02112-35088	SCREW,cover air intake pipe(M5×8)	3
05-09	13831HK3101	TUBE, connecting	1

FIG. 6

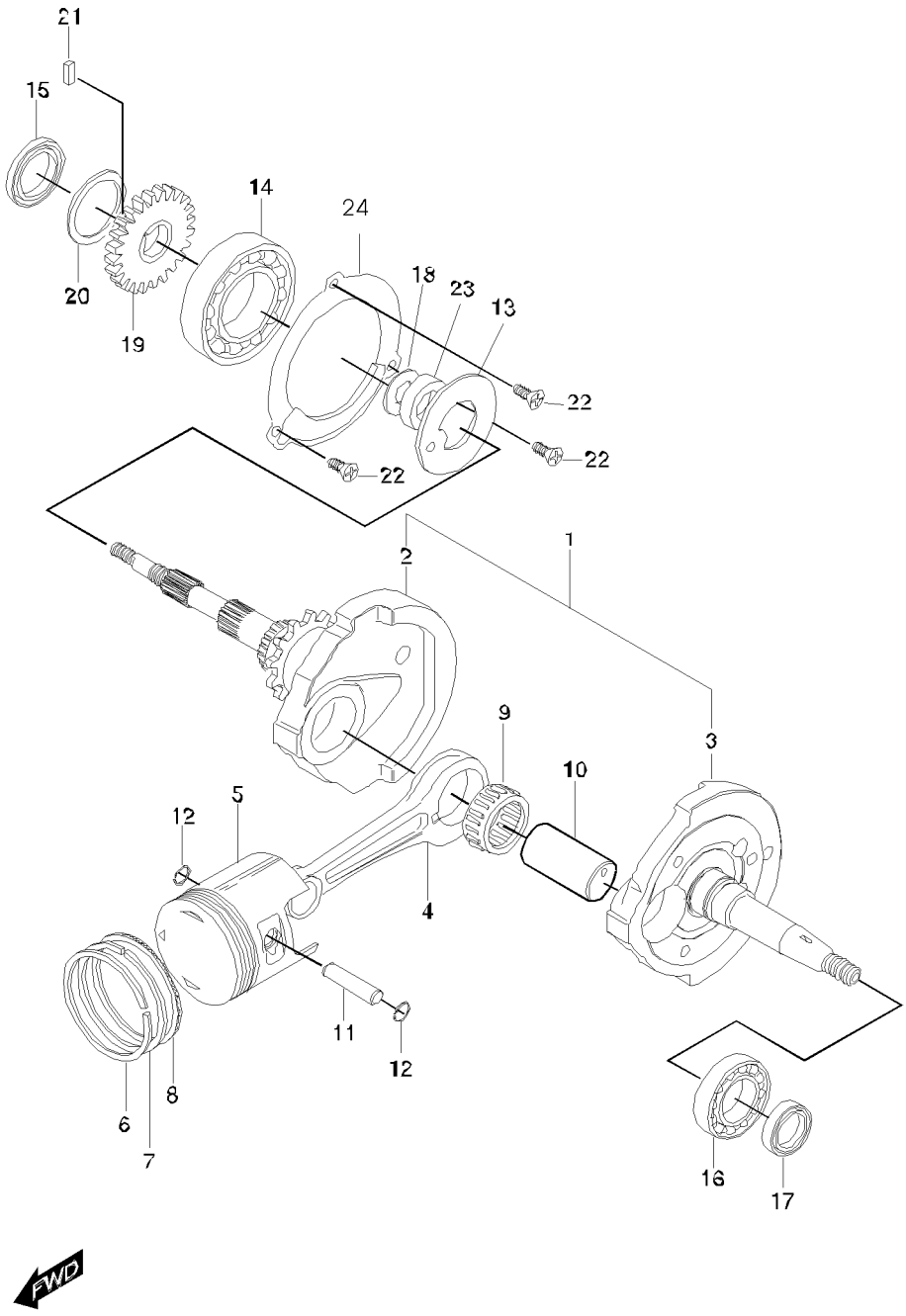

FIG. 6 CRANK SHAFT

REF. No.	PARTS NUMBER	PARTS NAME	Q'TY
06-01	12200HL7300HPA	CRANKSHAFT ASS'Y	1
06-02	12221HL7302CSA	CRANKSHAFT, R	1
06-03	12261HL7301CSA	CRANKSHAFT, L	1
06-04	12161HF45000BO	ROD, connecting	1
06-05	12111HL7301PPS	PISTON	1
06-06	12141-16E00	RING, piston 1st	1
06-07	12142-16E00	RING, piston 2nd	1
06-08	12144-16E00	RING, piston oil	1
06-09	09263-28027	BEARING, crank pin(28x36x16)	1
06-10	12211HL7300	PIN, crank	1
06-11	12151-30B00	PIN, piston	1
06-12	09381-15001	CIRCLIP, piston pin	2
06-13	12510HL7300	PLATE COMP, crankshaft oil guide	1
06-14	09262H35072	BEARING, crankshaft,R(35x72x16)	1
06-15	09283H26002	SEAL, crankshaft R oil(28x46x6)	1
06-16	09262H25062	BEARING, crankshaft L(25x62x17)	1
06-17	09283H19002	SEAL, crankshaft L oil(20x28x6)	1
06-18-01	12223HF4500060	SHIM, crankshaft R	1
06-18-02	12223HF4500065	SHIM, crankshaft R	1
06-18-03	12223HF4500070	SHIM, crankshaft R	1
06-18-04	12223HF4500075	SHIM, crankshaft R	1
06-18-05	12223HF4500080	SHIM, crankshaft R	1
06-18-06	12223HF4500085	SHIM, crankshaft R	1
06-18-07	12223HF4500090	SHIM, crankshaft R	1
06-18-08	12223HF4500095	SHIM, crankshaft R	1
06-18-09	12223HF4500100	SHIM, crankshaft R	1
06-18-10	12223HF4500105	SHIM, crankshaft R	1
06-18-11	12223HF4500110	SHIM, crankshaft R	1
06-19	16321HF4502	GEAR, oil pump drive	1
06-20	09280H20003	O-RING, oil pump drive gear	1
06-21	04221-04069	PIN, oil pump drive gear	1
06-22	02142-06128	SCREW, oil reserve plate(M6×12)	3
06-23	09180H42005	SPACER, oil guide plate	1
06-24	12521HL7300	PLATE, oil reserve	1

FIG. 7

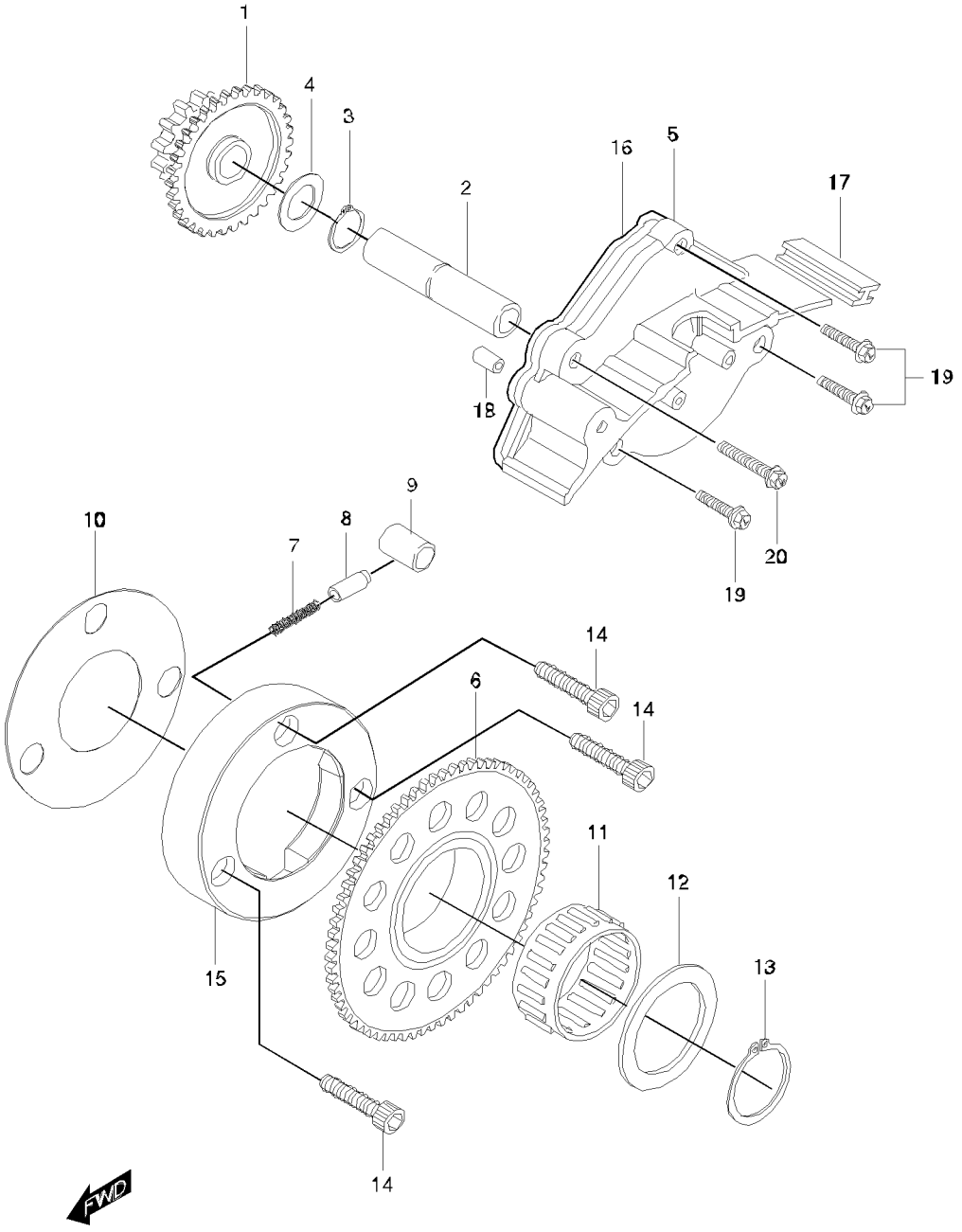

FIG. 7 STARTER CLUTCH

REF. No.	PARTS NUMBER	PARTS NAME	Q'TY
07-01	12611-05300	GEAR, starter idle	1
07-02	12612HF4500	SHAFT, starter idle gear	1
07-03	08331-31139	CIRCLIP, starter idle gear	1
07-04	09160-13010	WASHER, starter idle gear	1
07-05	11382HF450203P	CAP, start idle gear	1
07-06	12620HF4500	GEAR COMP, starter clutch	1
07-07	09440-03004	SPRING, starter clutch	1
07-08	12633-05300	PIECE, starter clutch roller push	3
07-09	09261-10003	ROLLER, starter clutch	3
07-10	12649HF4500	SHIM, starter clutch hub	3
07-11	09263H32001	BEARING, starter clutch gear	1
07-12	08211-32384	WASHER, starter clutch gear	1
07-13	08331-31329	CIRCLIP, starter clutch gear	1
07-14	09106-06030	BOLT, starter clutch(M6X16)	3
07-15	12630HF4500	HUB COMP, starter clutch1	1
07-16	11383HF4501	GASKET, starter idle gear cap	1
07-17	11384HF4500	CUSHION, starter idle gear cap	1
07-18	04213-09129	PIN, starter idle gear cap	1
07-19	01547-06258	SCREW, starter idle gear cap(M6×25)	3
07-20	01547-06358	SCREW, starter idle gear cap(M6×35)	1

FIG. 8

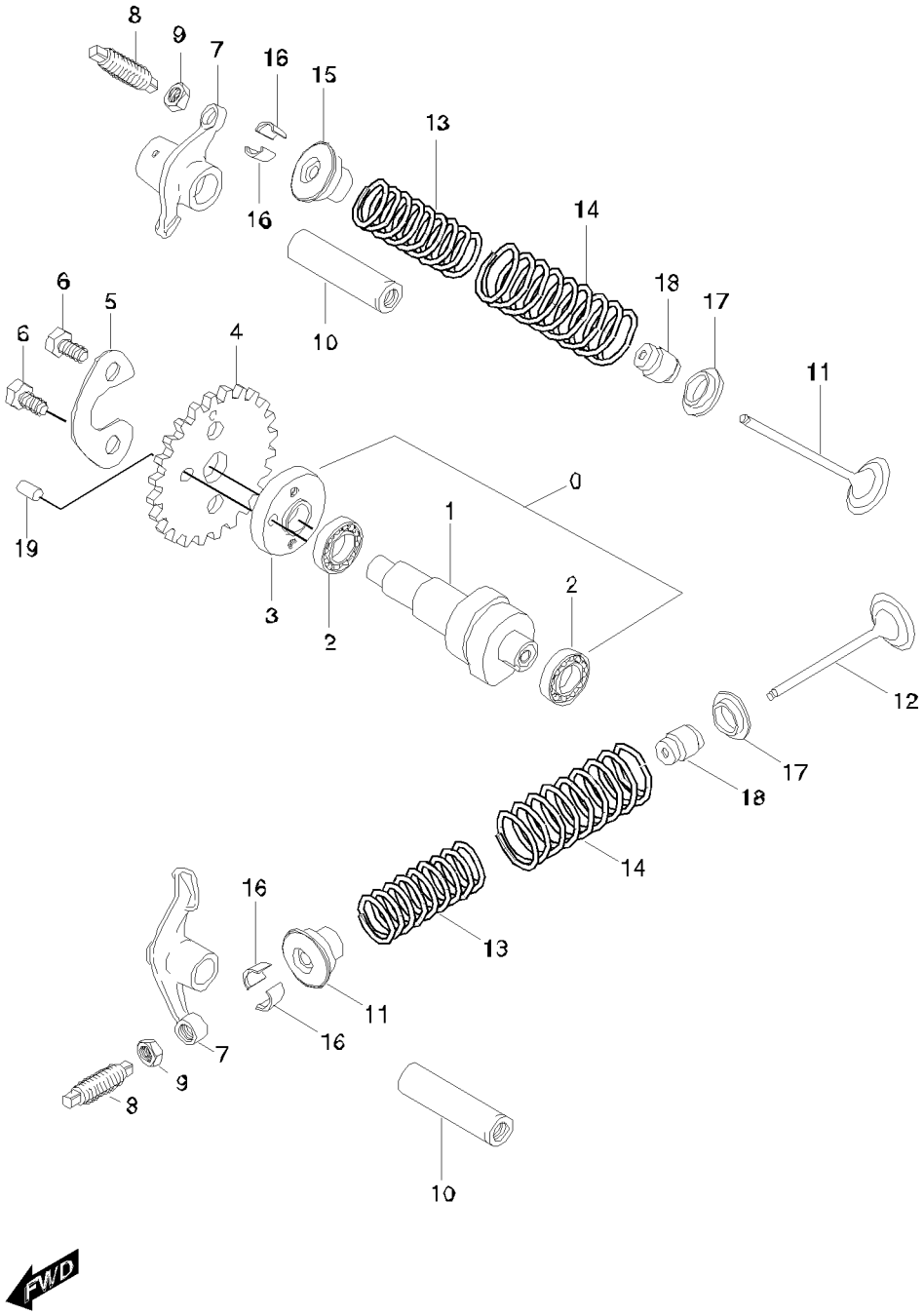
8
9
7
16
15
13
16
14
6
5
18
17
6
4
10
11
0
19
1
3
2
2
12
17
18
14
16
13
11
16
7
9
8
10
FWD

FIG. 8 CAMSHAFT

REF. No.	PARTS NUMBER	PARTS NAME	Q'TY
08-00	12710HL7300HPA	CAMSHAFT ASS'Y	1
08-01	12710HL7300888	CAMSHAFT	2
08-02	08113-60020	BEARING, camshaft 6002 C3(15x32x9)	1
08-03	12713HF4500	FLANGE, camshaft	1
08-04	12741HF4500	SPROCKET, camshaft	1
08-05	12747-30A00	WASHER, sprocket	2
08-06	09111-06032	BOLT, sprocket(M6x10.5)	2
08-07	12841HF4501	ARM, valve rocker	2
08-08	12842-49201	SCREW, tappet adjusting(M5x18.5)	2
08-09	12843-27A00	NUT, tappet adjusting(M5)	2
08-10	12861HF4500	SHAFT, valve rocker arm	1
08-11	12911HL7300	VALVE, intake	1
08-12	12912HL7300	VALVE, exhaust	2
08-13	12921HF4500	SPRING, valve inner	2
08-14	12922HF4500	SPRING, valve outer	2
08-15	12931HF4500	RETAINER, valve spring	4
08-16	12932HD6300	COTTER, valve	2
08-17	12933HF4501	SEAT, valve spring	2
08-18	09289-05008	OIL SEAL, valve stem(5x10x8)	1
08-19	09261-05005	PIN, sprocket knock	1

FIG. 9

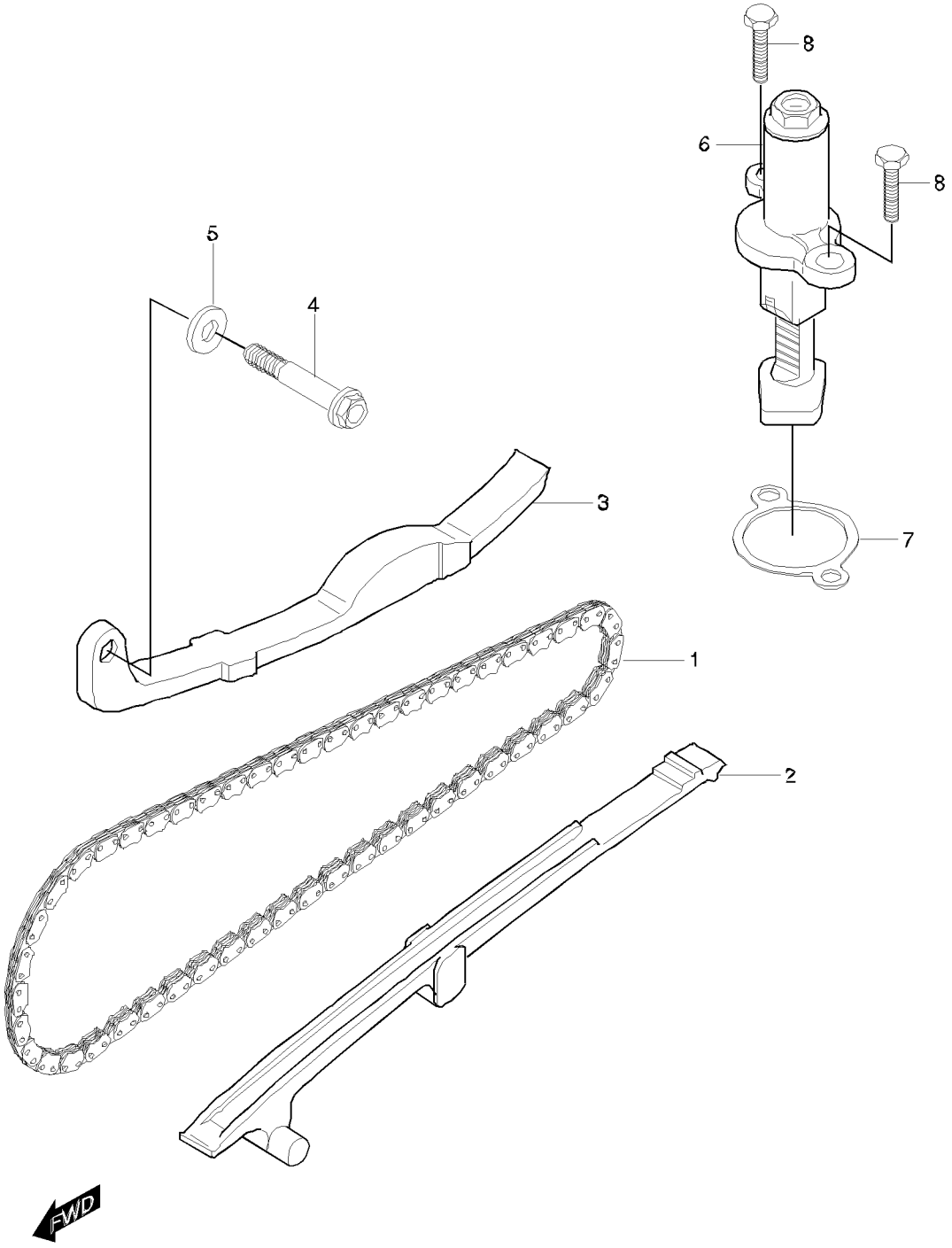

FIG. 9 CAM CHAIN

REF. No.	PARTS NUMBER	PARTS NAME	Q'TY
09-01	12760HF4500	CHAIN COMP, camshaft drive	1
09-02	12771HF4500	GUIDE, camchain	1
09-03	12811HF4500	TENSIONER, camchain	1
09-04	12812-30A00	BOLT, camchain tensioner(M6x32)	1
09-05	09168-06004	WASHER, camchain tensioner	1
09-06	12830H93B00	ADJUSTER ASS'Y, tensioner	1
09-07	12837-19B11	GASKET, tensioner adjuster	1
09-08	01104-06205	BOLT, tensioner adjuster(M6x20)	2

FIG. 10

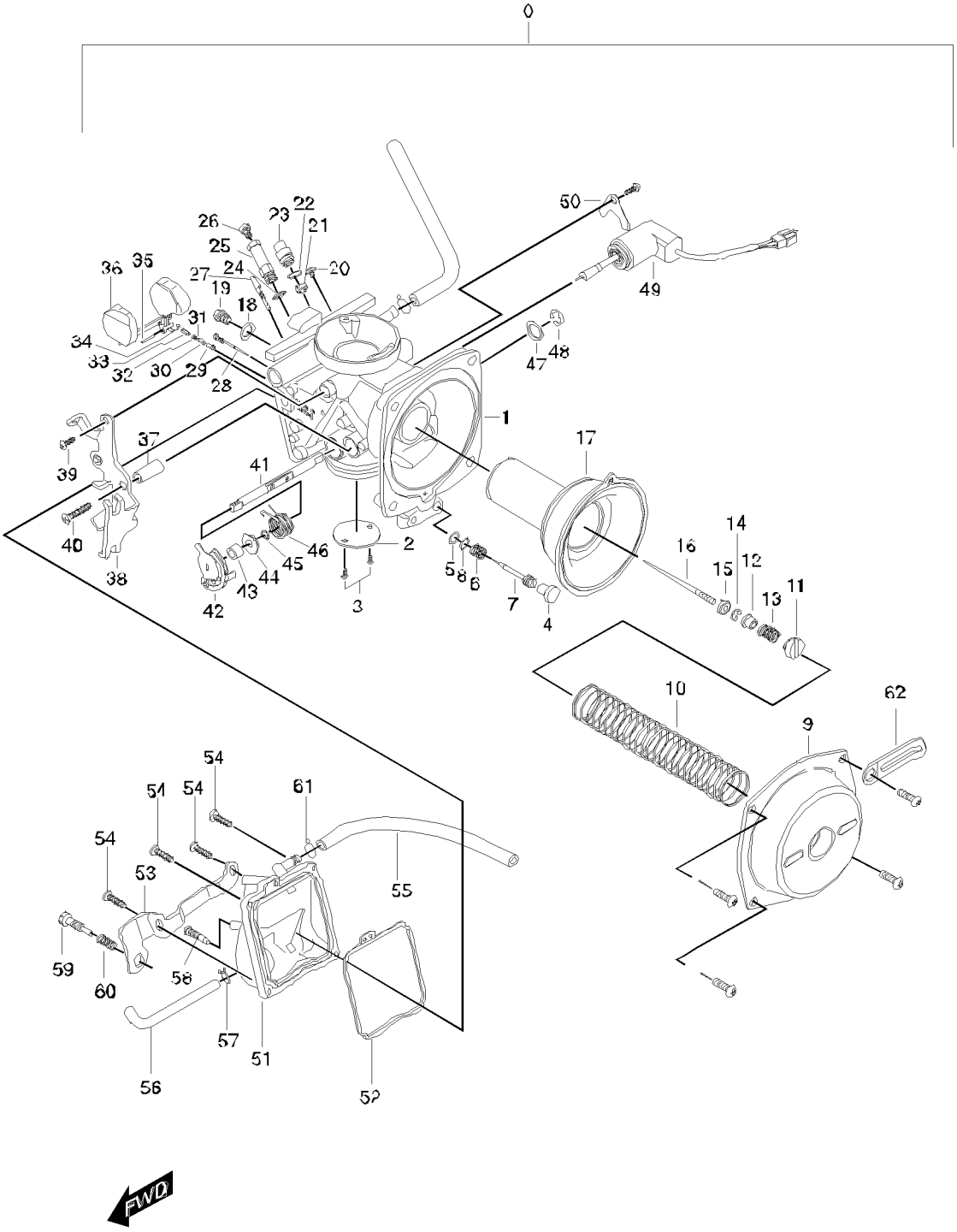
0
1
2
3
4
5
6
7
8
9
10
11
12
13
14
15
16
17
18
19
20
21
22
23
24
25
26
27
28
29
30
31
32
33
34
35
36
37
38
39
40
41
42
43
44
45
46
47
48
49
50
51
52
53
54
55
56
57
58
59
60
61
62
FWD

FIG. 10 CARBURETOR

REF. No.	PARTS NUMBER	PARTS NAME	Q'TY
10-00	13200HL7300	CARBURETOR ASS'Y	1
10-01	13301HL7300	.MIXING BODY ASS'Y	1
10-02	13386-09410	.THROTTLE VALVE	1
10-03	13268-37420	.SCREW	2
10-04	02112-05107	.PLUG	1
10-05	13305HL7300	.O-RING	1
10-06	13306HL7300	.SPRING(CO)	1
10-07	13307HL7300	.ADJUSTER	1
10-08	13308HL7300	.WASHER	1
10-09	13309HL7300	.DIAPHRAGM COVER	1
10-10	13310HL7300	.SPRING(CO)	1
10-11	13311HL7300	.SCREW	1
10-12	13312HL7300	.RING	1
10-13	13313HL7300	.SPRING(CO)	1
10-14	13314HL7300	.E-RING	1
10-15	13315HL7300	.RING	1
10-16	13316HL7300	.JET NEEDLE(JN)	1
10-17	13434-30650	.DIAPHRAGM ASS'Y	1
10-18	13318HL7300	.WASHER	1
10-19	13319HL7300	.SCREW	1
10-20	13320HL7300	.SCREW	1
10-21	13321HL7300	.NEEDLE(AB)	1
10-22	13322HL7300	.WASHER	1
10-23	13323HL7300	.SCREW	1
10-24	13324HL7300	.WASHER	1
10-25	13325HL7300	.SCREW	1
10-26	13326HL7300	.MAIN JET(MJ)	1
10-27	13327HL7300	.PILOT JET(PJ)	1
10-28	13328HL7300	.PILOT AIR JET(PAJ)	1
10-29	13329HL7300	.VALVE SEAT(VS)	1
10-30	13330HL7300	.FILTER	1
10-31	13331HL7300	.O-RING	1
10-32	13332HL7300	.SCREW	1
10-33	13333HL7300	.NEEDLE VALVE	1
10-34	13334HL7300	.CLIP	1
10-35	13335HL7300	.PIN	1
10-36	13336HL7300	.FLOAT ASS'Y	1
10-37	13337HL7300	.SPACER	1

10-38	13338HL7300	.BRACKET ASS'Y	1

FIG. 10 CARBURETOR

REF. No.	PARTS NUMBER	PARTS NAME	Q'TY
10-39	13339HL7300	.SCREW	1
10-40	13340HL7300	.SCREW	1
10-41	13341HL7300	.GUIDE	1
10-42	13342HL7300	.LEVER ASS'Y	1
10-43	13343HL7300	.SPACER	1
10-44	13344HL7300	.RING	1
10-45	13345HL7300	.SEAL	1
10-46	13346HL7300	.SPRING(CO)	1
10-47	13347HL7300	.WASHER	1
10-48	13348HL7300	.E-RING	1
10-49	13349HL7300	.THERMO ELEMENT ASS'Y	1
10-50	13350HL7300	.PLATE	1
10-51	13351HL7300	.FLOAT BODY ASS'Y	1
10-52	13352HL7300	.O-RING	1
10-53	13353HL7300	.PLATE	1
10-54	13354HL7300	.SCREW	4
10-55	13355HL7300	.OVERFLOW HOSE	1
10-56	13356HL7300	.DRAIN HOSE	1
10-57	13357HL7300	.CLIP	1
10-58	13358HL7300	.SCREW	1
10-59	13359HL7300	.ADJUST SCREW	1
10-60	13360HL7300	.SPRING	1
10-61	13361HL7300	.CLIP	1

FIG. 11

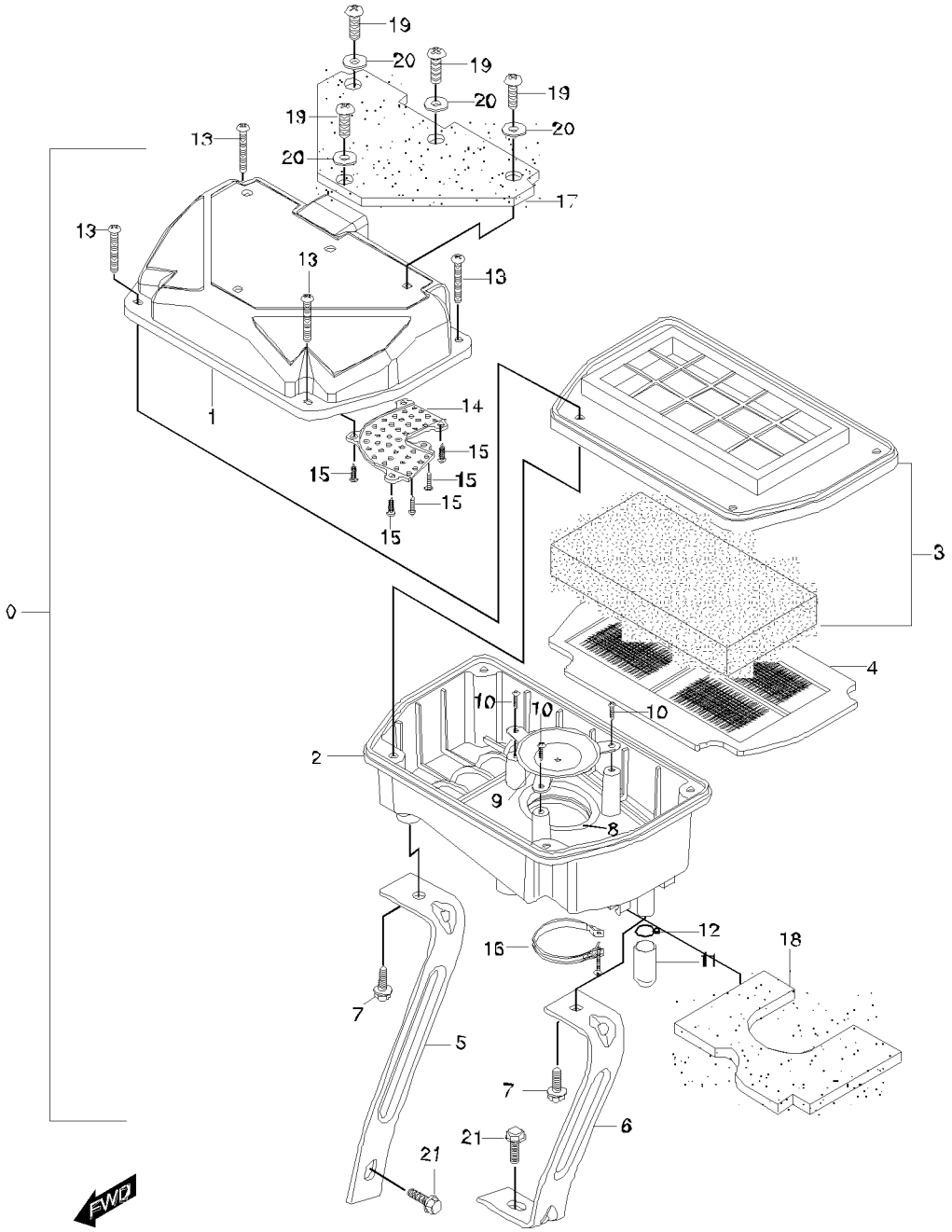
19
20
19
20
19
20
19
20
13
17
13
13
13
1
14
15
15
15
15
15
15
3
0
4
10
10
10
2
9
8
12
16
11
18
7
5
7
6
21
21
FWD

FIG. 11 AIR CLEANER

REF. No.	PARTS NUMBER	PARTS NAME	Q'TY
11-00	13700HL7301	CLEANER ASS'Y, air	1
11-01	13720HL7301	CASE COMP, air cleaner	1
11-02	13740HL7300	CAP COMP, air cleaner	1
11-03	13780HL7300	FILTER COMP, air cleaner	1
11-04	13750HL7300	TRAP COMP, frame	1
11-05	13743HL7301	BRACKET, air cleaner No.1	1
11-06	13744HL7301	BRACKET, air cleaner No.2	1
11-07	01134-05106	BOLT, air cleaner bracket(M5×10)	2
11-08	13881HL7300	TUBE, outlet	1
11-09	13891HL7300	PLATE, air cleaner	1
11-10	03241-05168	SCREW, air cleaner plate(M5×16)	3
11-11	13895HF4500	PLUG, oil drain	1
11-12	09401-14301	CIRCUP, oil drain	1
11-13	02142-05305	BOLT, air cleaner(M5×30)	4
11-14	13893HL7300	CAP, inlet guide	1
11-15	03241-05168	SCREW, inlet guide cap(M5×16)	5
11-16	09402-56208	CLAMP, outlet tube	1
11-17	13861HL7301	SEAT, air cleaner case	1
11-18	13871HL7301	SILENCER, air cleaner	1
11-19	03511-04105	SCREW, air cleaner seat(M4×10)	4
11-20	13724-41D40	WASHER, air cleaner seat	4
11-21	01137-06128	BOLT, air cleaner bracket(M6×12)	2

FIG.12

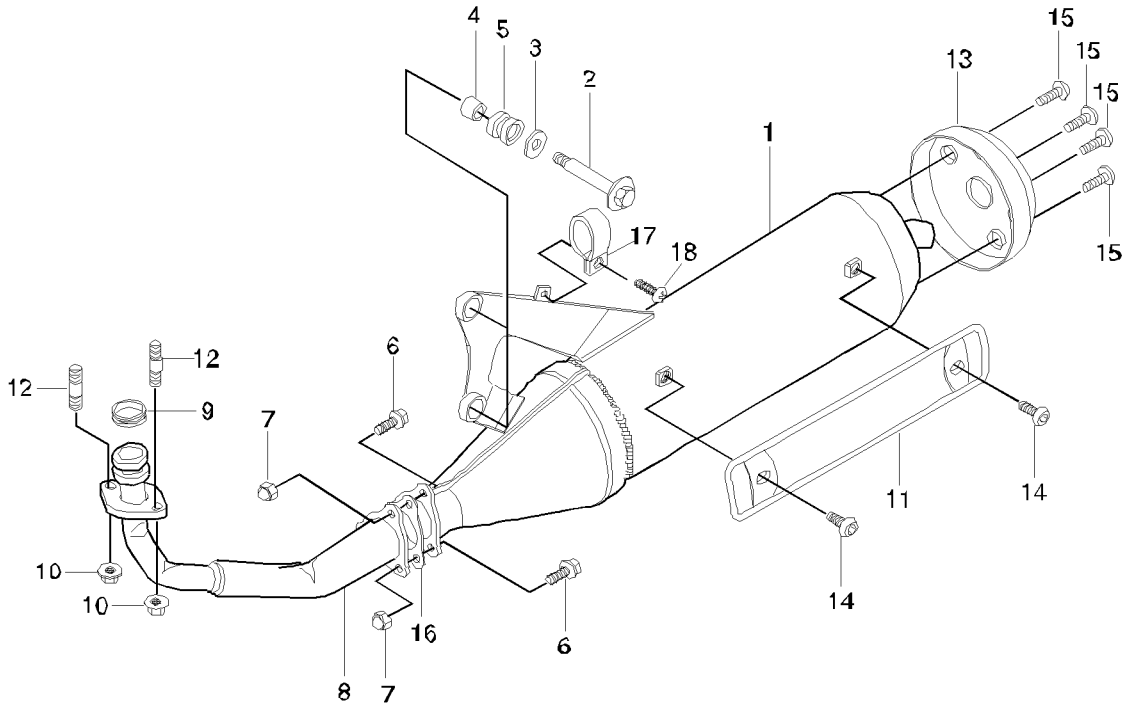

FIG. 12 MUFFLER

REF. No.	PARTS NUMBER	PARTS NAME	Q'TY
12-01	14300HL7300PAM	MUFFLER COMP	1
12-02	01137-08355	BOLT, muffler support(M8x35)	2
12-03	09160-08064	WASHER, muffler support	2
12-04	14773H41D00	SPACER, muffler brkt	2
12-05	09320H12058	CUSHION, muffler brkt	2
12-06	01107-06208	BOLT, exhaust connector(M6×20)	3
12-07	08313-11068	NUT, exhaust connector(M6)	3
12-08	14150HL7300PAM	PIPE COMP, exhaust	1
12-09	14181HF4501	GASKET, exhaust pipe	1
12-10	08316-26086	NUT, exhaust pipe(M8)	2
12-11	14780HL7300PLA	COVER COMP, muffler	1
12-12	01421-08258	STUD BOLT, exhaust pipe(M8x25)	2
12-13	14183HL7300	COVER, muf body tail	1
12-14	09119H06001	BOLT, muffler cover	2
12-15	07110-06108	BOLT, tail cover(M6×10)	4
12-16	14182HL7300	GASKET, exhaust flange connector	1
12-17	09403-19404	CLAMP, rear brake hose	1
12-18	02142-06165	SCREW, Rr brake hose clamp No1.(M6×16)	1

FIG. 13

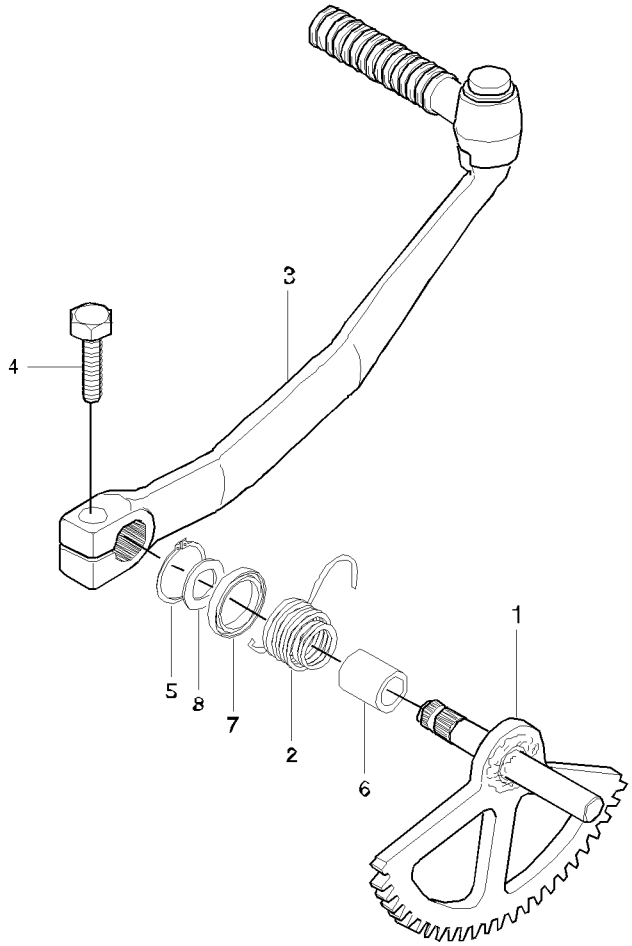

FIG. 13 KICK STARTER

REF. No.	PARTS NUMBER	PARTS NAME	Q'TY
13-01	26210HF4502	SHAFT COMP, kick starter	1
13-02	09448H30016	SPRING, kick starter return	1
13-03	26300HF4500	LEVER ASS'Y, kick starter	1
13-04	01107-08208	BOLT, kick starter lever(M8x20)	1
13-05	08331-31149	CIRCLIP, kick shaft	1
13-06	09300-14011	BUSH, kick starter shaft	1
13-07	09285-14001	SEAL, kick shaft oil	1
13-08	09160-21005	WASHER	1

FIG. 14

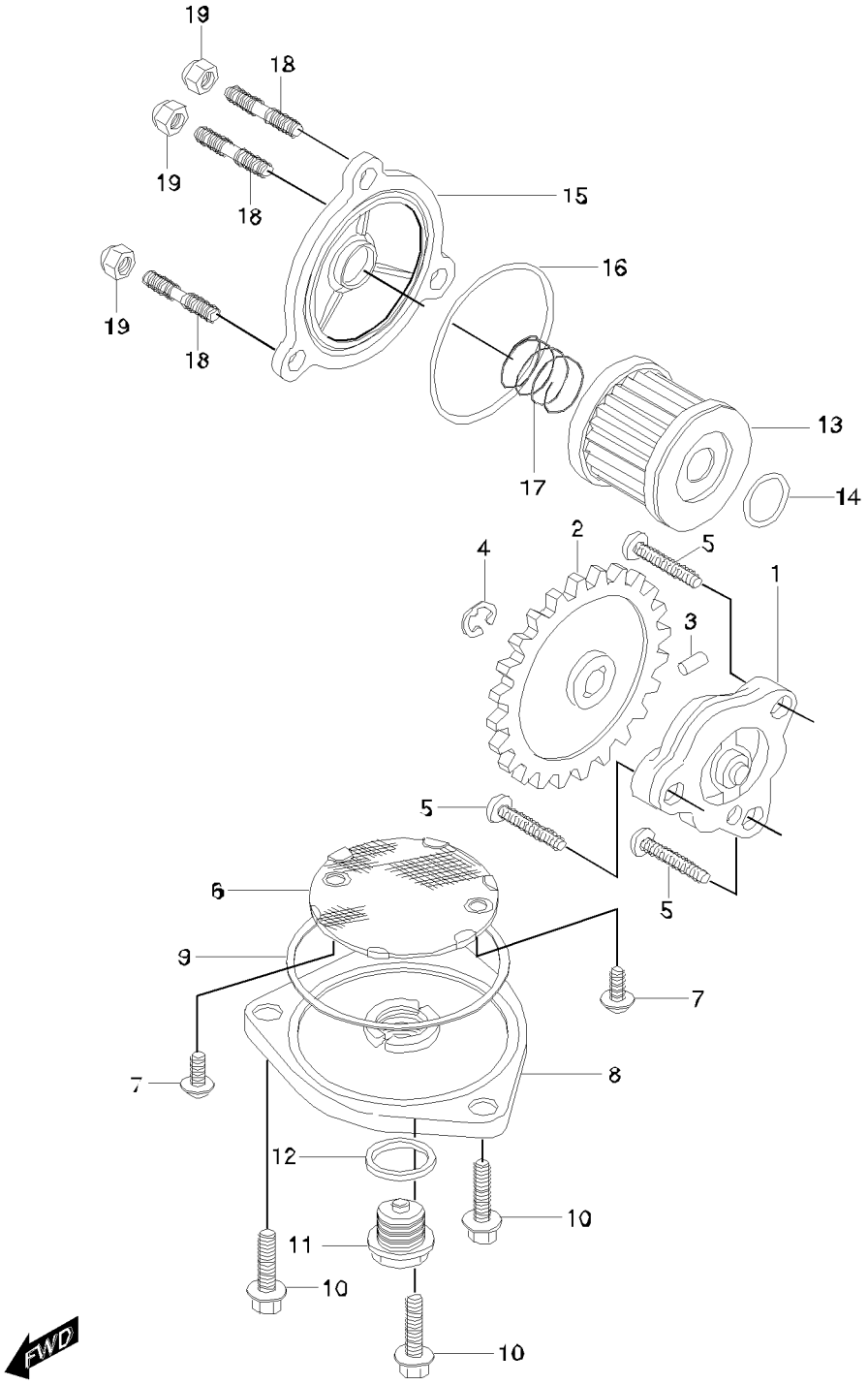

FIG. 14 OIL PUMP

REF. No.	PARTS NUMBER	PARTS NAME	Q'TY
14-01	16400-42A01	PUMP ASS'Y, oil	1
14-02	16331HF4504	GEAR, oil pump driven	1
14-03	09261-02008	PIN, oil pump driven gear	1
14-04	08332-11069	CIRCLIP, oil pump driven gear	1
14-05	02112-06258	SCREW, engine oil pump(M6x25)	3
14-06	16520-05202	STRAINER COMP, engine oil	1
14-07	02112-75128	SCREW, engine oil strainer(M5x12)	2
14-08	16523-05200	CAP, oil strainer	1
14-09	09280-60005	O-RING, oil strainer cap	1
14-10	01547-06208	BOLT, oil strainer cap(M6x30)	3
14-11	09247-14002	PLUG, oil drain	1
14-12	09168-14002	GASKET, drain plug	1
14-13	16510-05240	FILTER COMP, engine oil	1
14-14	09280-13004	O-RING, oil filter	1
14-15	16512HF450103P	CAP, oil filter	1
14-16	09280-54001	O-RING, oil filter cap	1
14-17	09440-18002	SPRING, oil filter cap	1
14-18	01421-06128	STUD BOLT, oil filter ca p(M6x12)	3
14-19	08313-11068	NUT, oil filter cap(M6)	3

FIG. 15

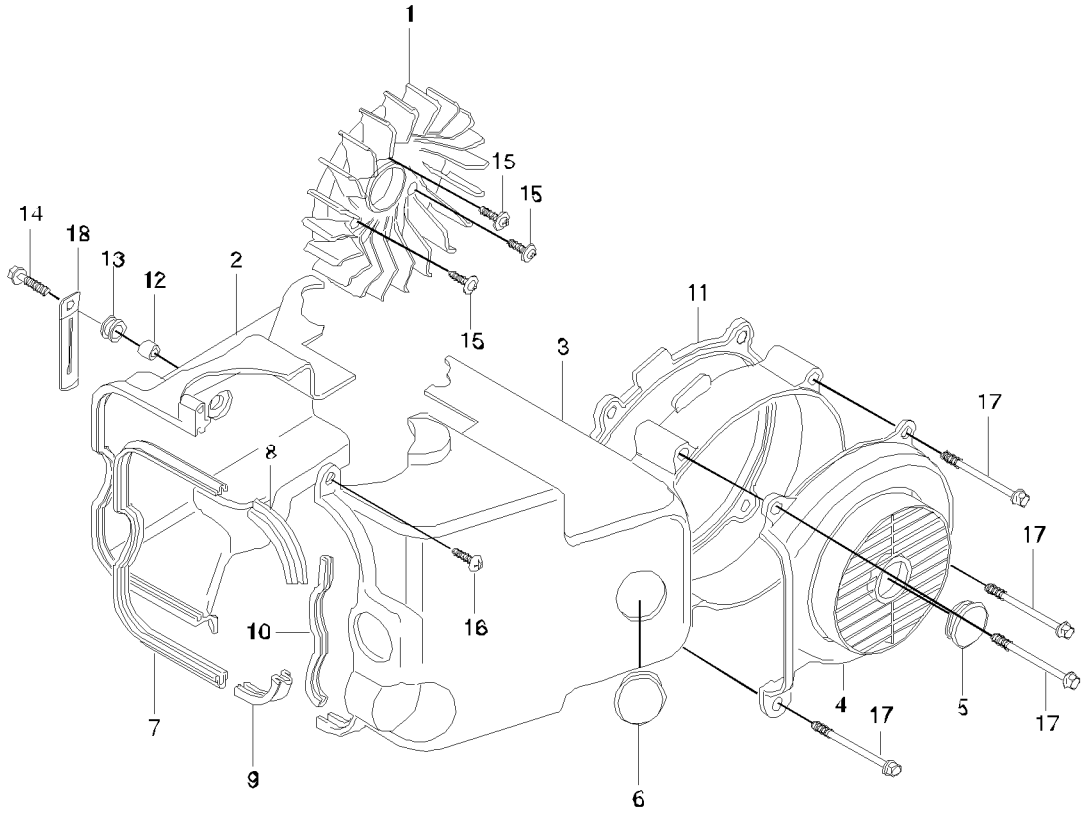

FIG. 15 COWLING FAN

REF. No.	PARTS NUMBER	PARTS NAME	Q'TY
15-01	17110HF4501	FAN COMP, cooling	1
15-02	17121HF4502	COWLING, cylinder	1
15-03	17130HF4500	COWLING COMP, fan	1
15-04	17150HF4500	CAP COMP, fan cowling	1
15-05	09250H27001	PLUG, cowling fan cap	1
15-06	09250H30003	PLUG, cowling fan	1
15-07	17122HF4500	MOLD, cylinder cowling	1
15-08	17137HF4500	MOLD, fan cowling No.1	1
15-09	17138HF4500	MOLD, fan cowling No.2	1
15-10	17139HF4500	MOLD, fan cowling No.3	1
15-11	17133HF4502	DAMPER, fan cowling	1
15-12	09180-06011	SPACER, cylinder cowling	1
15-13	09320-09016	CUSHION, cylinder cowling	1
15-14	01517-06205	BOLT, cylinder cowling(M6x20)	1
15-15	02112-16166	SCREW, cooling fan(M6x16)	3
15-16	03151-06205	SCREW, fan cowling No.2(M6x20)	1
15-17	01517-06505	BOLT, fan cowling No.1(M6x50)	4
15-18	09404-06405	CLAMP,breather hose cap	1

FIG. 16

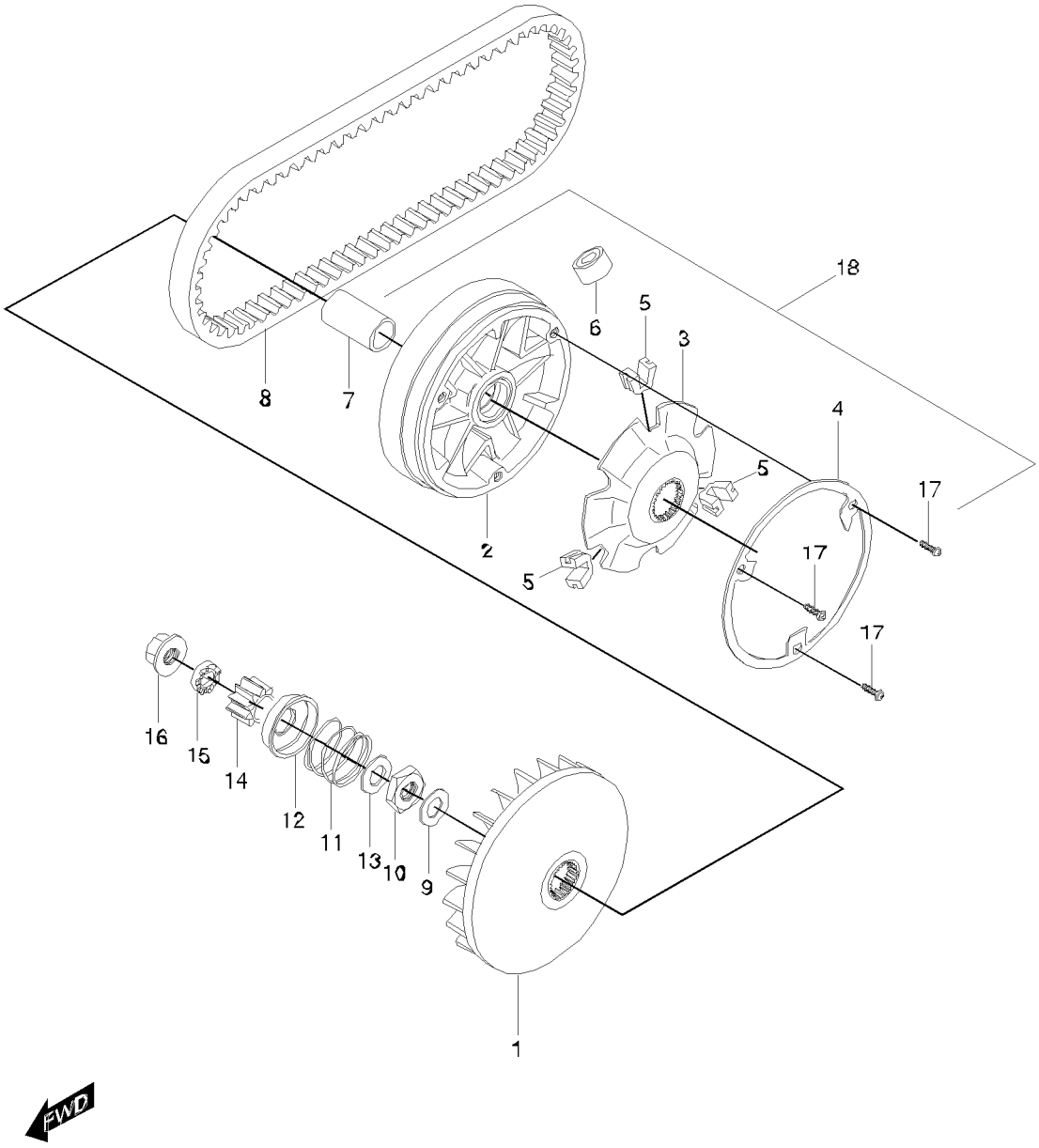

FIG. 16 TRANSMISSION (1)

REF. No.	PARTS NUMBER	PARTS NAME	Q'TY
16-01	21110HF4500	FACE COMP, fixed drive	1
16-02	21120HF4502	FACE COMP, movable drive	1
16-03	21431HF4500	PLATE, movable drive	1
16-04	21122HF4501	COVER, movable drive	1
16-05	21481HF4500	DAMPER, movable drive plate	3
16-06	21650HG2620HPA	ROLLER ASS'Y, movable drive	6
16-07	21127HF4501	SPACER, movable drive	1
16-08	27601HF4500	V-BELT, drive	1
16-09	09164H16001	WASHER, fixed drive face	1
16-10	09140-16014	NUT, fixed drive face	1
16-11	09440H29003	SPRING, kick driven gear	1
16-12	26292HL7301	HOLDER, kick driven	1
16-13	08221-25355	WASHER, kick driven gear spring	1
16-14	26280HF4500	GEAR COMP, kick starter driven	1
16-15	26291HF4500	STARTER, kick	1
16-16	08316-26108	NUT, kick starter(M10)	1
16-17	02142-04108	SCREW, movable drive(M4x10)	3
16-18	21120HL7300HPA	FACE MOVABLE DRIVE ASS'Y	1

FIG. 17

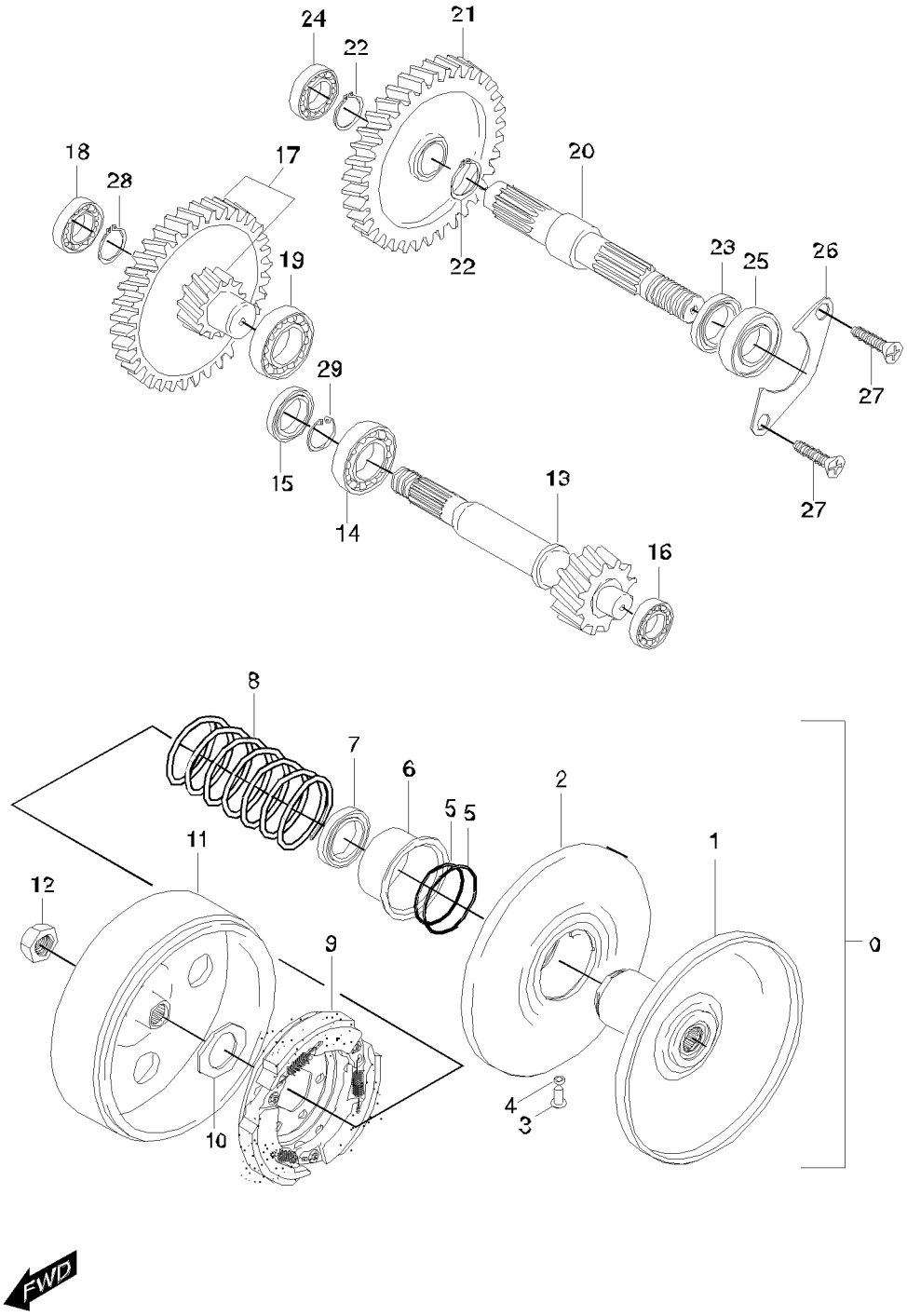
24
22
21
18
28
17
20
22
23
25
26
19
29
27
15
13
27
14
16
8
7
6
5
5
2
11
1
12
9
0
4
3
10
FWD

FIG. 17 TRANSMISSION (2)

REF. No.	PARTS NUMBER	PARTS NAME	Q'TY
17-00	21200HF4500	PULLEY ASS'Y, driven	1
17-01	21210HF4502	FACE COMP, fixed driven	1
17-02	21240HF4500	FACE COMP, movable driven	3
17-03	09201-05006	PIN, movable driven	3
17-04	09180-05042	SPACER, movable driven pin	2
17-05	09280-41005	O-RING, movable driven	1
17-06	21471-03A03	SHEET, movable driven	2
17-07	09284-34002	SEAL, movable driven oil(M33x39x3)	1
17-08	09440H49002	SPRING, movable driven	1
17-09	21501HF4501	CLUTCH ASS'Y, shoe(NA)	1
17-10	09140H28004	NUT, clutch shoe(M28)	1
17-11	21220HF4500	HOUSING COMP, clutch	1
17-12	08316-26108	NUT, clutch housing	1
17-13	24131HF4503	SHAFT, drive	1
17-14	08110-62040	BEARING, drive shaft R 6204(20x47x14)	1
17-15	09283H17004	OIL SEAL, drive shaft(17x28x5)	1
17-16	08110-62010	BEARING, drive shaft L 6201(12x32x10)	1
17-17	24150HF4501HPA	SHAFT ASS'Y, idle	1
17-18	08113-62010	BEARING, idle shaft R 6201 C3(12x32x10)	1
17-19	08113-60040	BEARING, idle shaft L 6004 C3(20x47x14)	1
17-20	24141HF4531	SHAFT, rear axle	1
17-21	24371HF4500	GEAR, final driven	1
17-22	08331-31229	CIRCLIP, final driven gear	2
17-23	09283-27010	SEAL, axle shaft oil(27x40x6)	1
17-24	08110-62030	BEARING, axle shaft R 6203(17x40x12)	1
17-25	09262H22001	BEARING, axle shaft L (25x50x14)	1
17-26	24751HF4500	RETAINER, axle shaft bearing	1
17-27	02122-06168	SCREW, bearing retainer(M6x16)	2
17-28	08331-31209	CIRCLIP, idle gear	1
17-29	08331-41479	CIRCLIP, drive shaft r bearing	1

FIG. 18

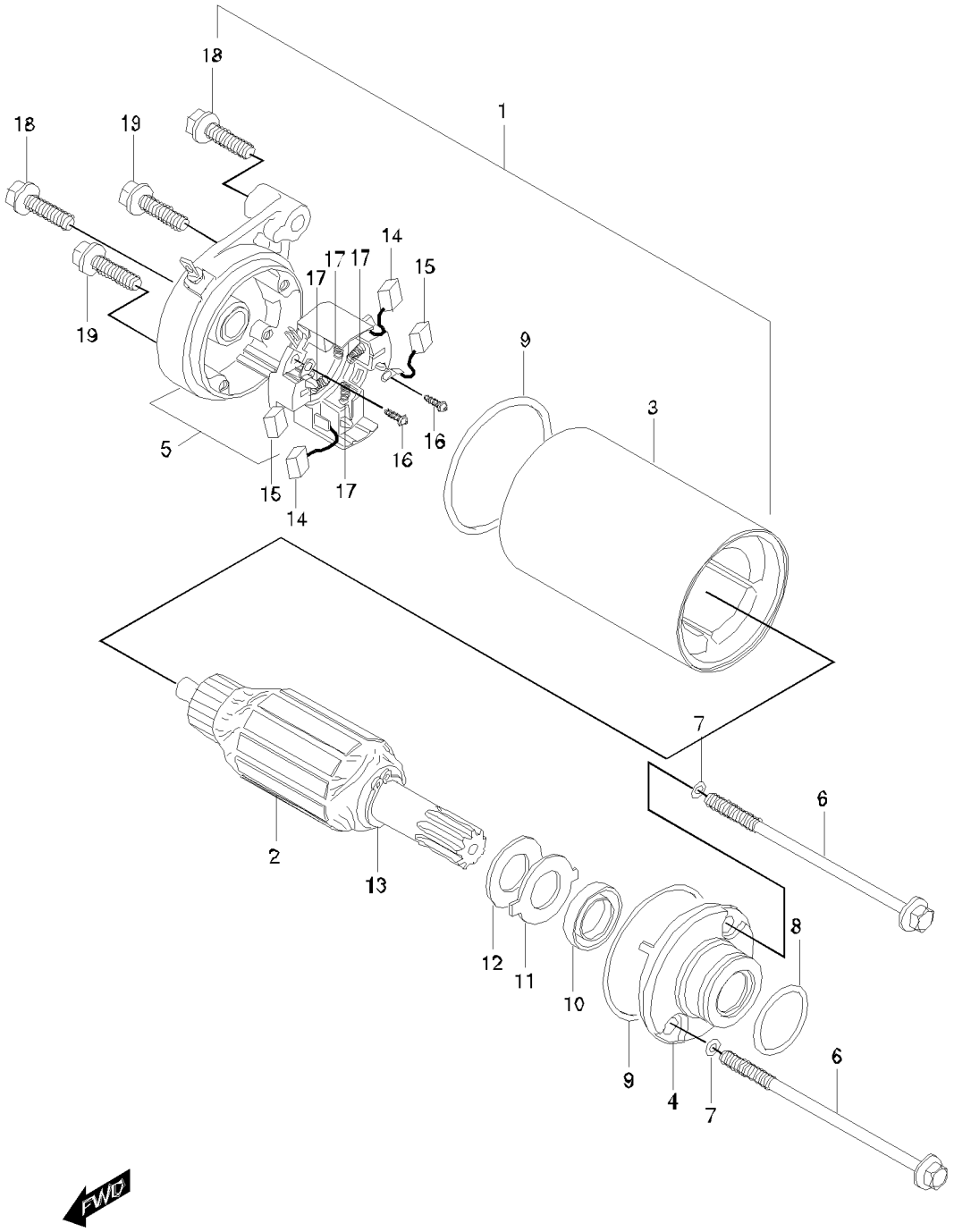
18
18
19
19
1
14
17
17
17
15
9
3
16
16
5
15
14
17
7
6
2
13
8
12
11
10
9
4
7
6
FWD

FIG. 18 STARTING MOTOR

REF. No.	PARTS NUMBER	PARTS NAME	Q'TY
18-01	31100HL7300	MOTOR ASS'Y, starting	1
18-02	31310-11D00	.ARMATURE ASS?Y, starter	1
18-03	31100-05320	.YOKE ASS'Y, starter	1
18-04	31150-42A01	.HOUSING ASS'Y, starter	1
18-05	31175HL7300	.FRAME ASS'Y, commutator	1
18-06	31281-32C10	.BOLT, through	2
18-07	31156-38300	.O-RING	2
18-08	09280-24001	.O-RING	1
18-09	31264-35C10	.O-RING	2
18-10	31153-49210	.SEAL, oil	1
18-11	31361-32C00	.PLATE, lock	1
18-12	31361-38300	.WASHER, plate lock	1
18-13	31361-10200	.RING, shaft snap	1
18-14	31132-32C10	.BRUSH SUB-ASS'Y, starter	2
18-15	31131-32C20	.BRUSH, starter	2
18-16	31114-32C10	.SCREW	2
18-17	31135-32C10	.SPRING, compression coil	4
18-18	01547-06308	BOLT, starting motor(M6X30)	2
18-19	01547-06358	BOLT, starting motor(M6X35)	2

FIG. 19

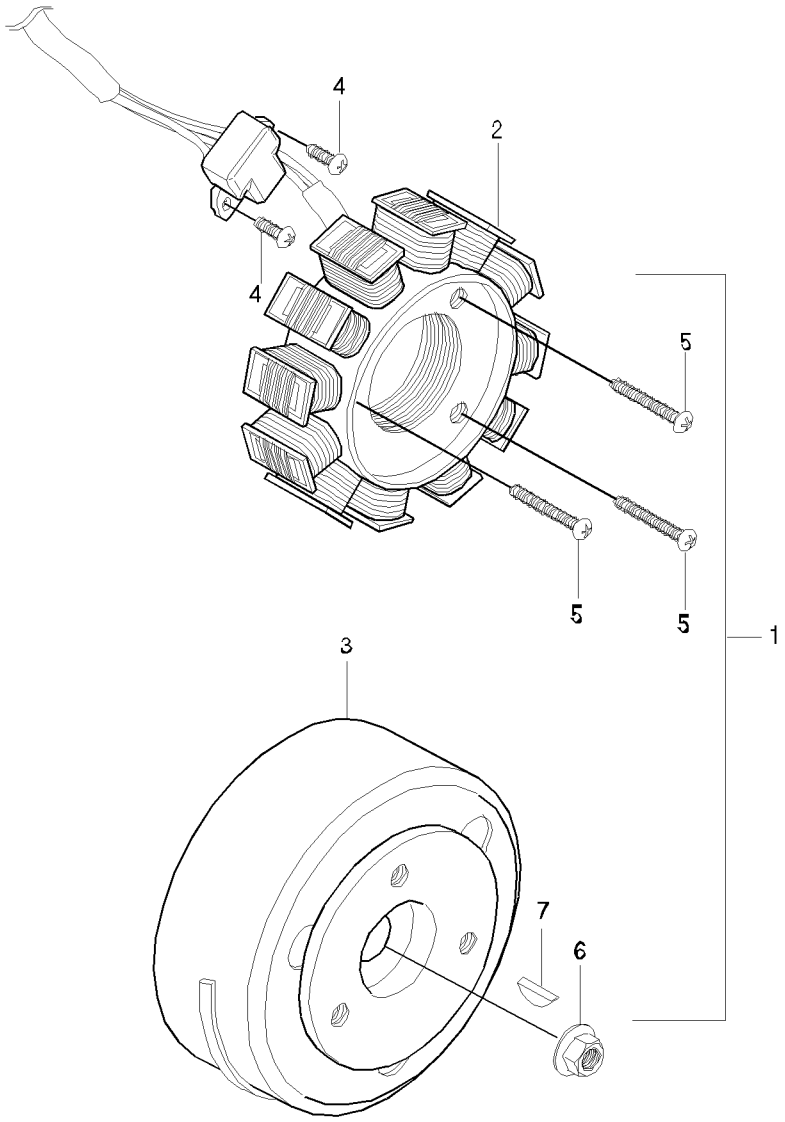

FIG. 19 MAGNETO

REF. No.	PARTS NUMBER	PARTS NAME	Q'TY
19-01	32100HF4500	MAGNETO ASS'Y	1
19-02	32101HF4500	STATOR ASS'Y	1
19-03	32102HF4500	ROTOR ASS'Y	1
19-04	02112-05128	SCREW, pick up coil(M5x12)	2
19-05	02112-05258	SCREW, magneto stator(M5x25)	3
19-06	09159H12001	NUT, magneto flywheel(M12)	1
19-07	08341-31039	KEY, magneto	1

FIG. 20

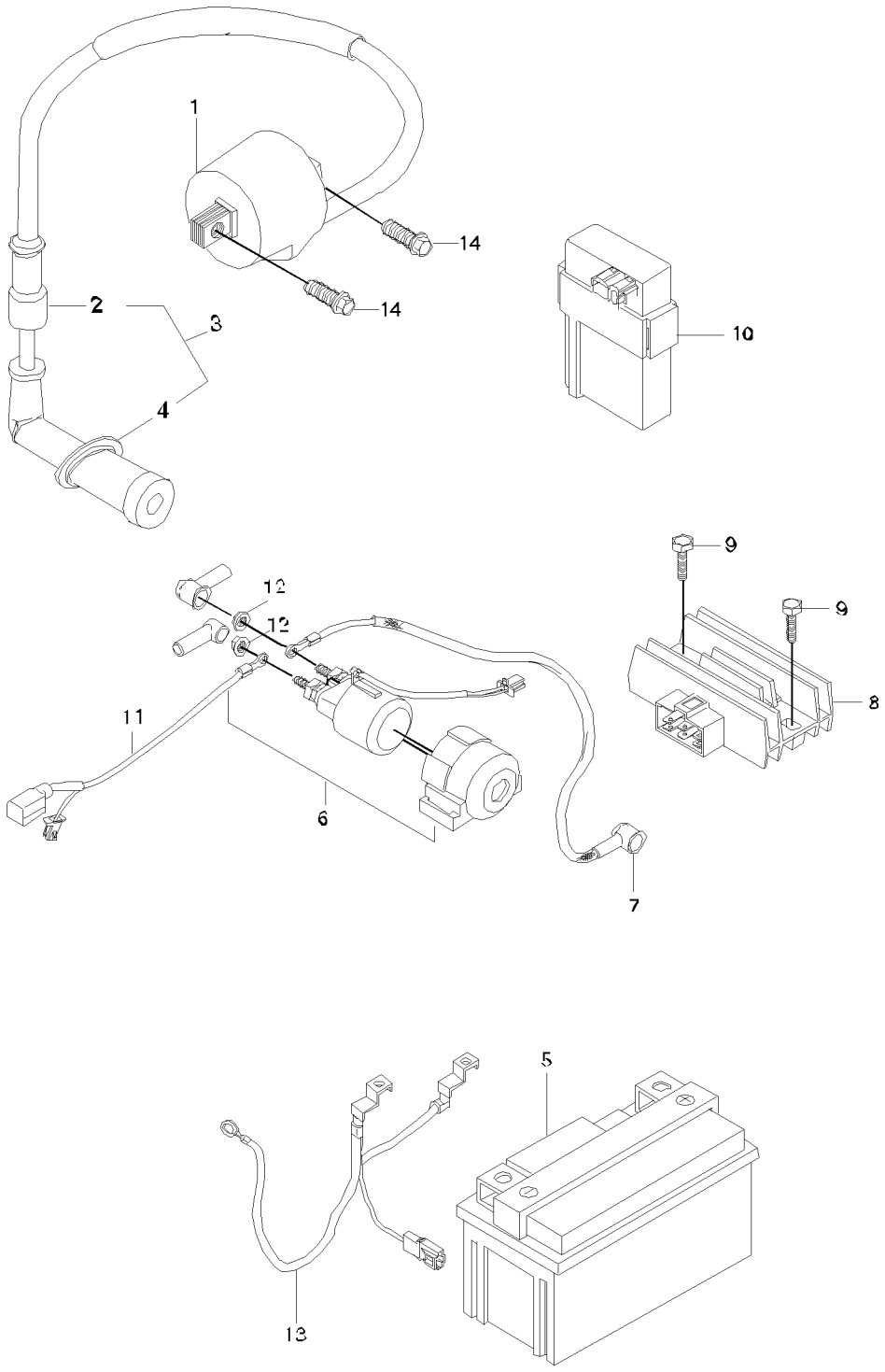

FIG. 20 BATTERY & ELECTRICAL

REF. No.	PARTS NUMBER	PARTS NAME	Q'TY
20-01	33410HK3100	COIL ASS'Y, ignition	1
20-02	33542-98000	SEAL, high tension cord	1
20-03	33510HF4600	CAP, spark plug	1
20-04	33541HF4500	SEAL, spark plug	1
20-05	33610-06C11	BATTERY ASS'Y(12V 6AH)	1
20-06	31800HG5100	RELAY ASS'Y, starter motor	1
20-07	33850HL7300	LEAD WIRE, starter motor	1
20-08	32800H01413	RECTIFIER REGULATOR ASS'Y	1
20-09	09128-06035	BOLT, rectifier regulator	2
20-10	32900HL7350	CDI UNIT	1
20-11	33840HL7300	LEADWIRE, battery plus	1
20-12	08316-26066	NUT, starter motor relay terminal(M6)	2
20-13	33860HL7300	LEAD WIRE, battery minus	1
20-14	01134-06208	BOLT, ignition(M6x20)	2

FIG. 21

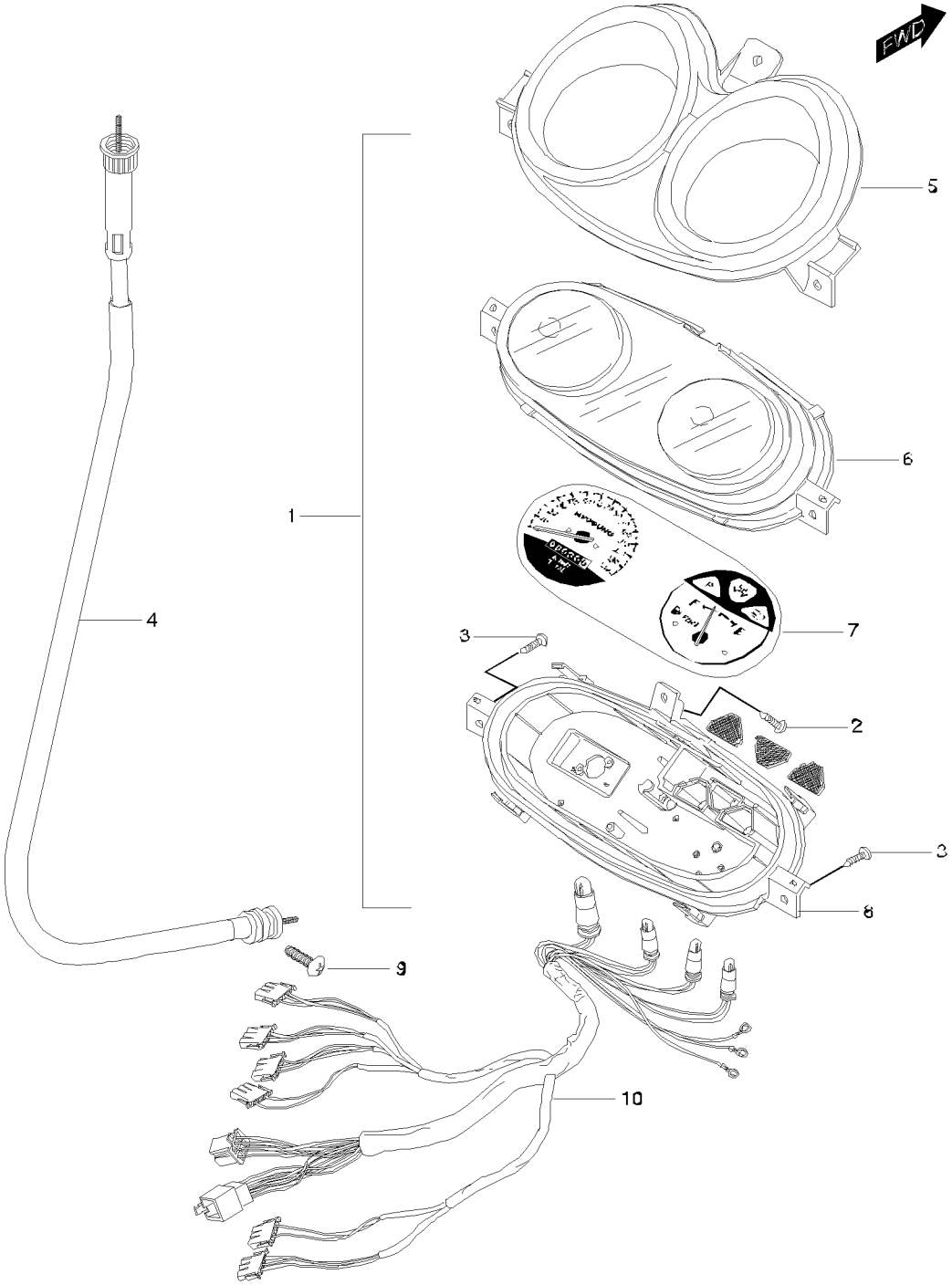

FIG. 21 SPEEDOMETER

REF. No.	PARTS NUMBER	PARTS NAME	Q'TY
21-01	34100HL7300	SPEEDO METER ASS'Y	1
21-02	03241-05126	SCREW, speedo meter(M5x12)	1
21-03	03241-05206	SCREW, speedo meter(M5x20)	2
21-04	34910HB1101	CABLE ASS'Y, speedo meter	1
21-05	34210HL7300	.DECORATION, speedo meter	1
21-06	34150HG2600	.WINDOW CASE	1
21-07	34112HL7300	.DIAL	1
21-08	34150HG2600	.CASE, SUB	1
21-09	02112-05168	SCREW, speedometer cable(M5X16)	1
21-10	34170HL7300	.WIRING ASS'Y	1

FIG. 22

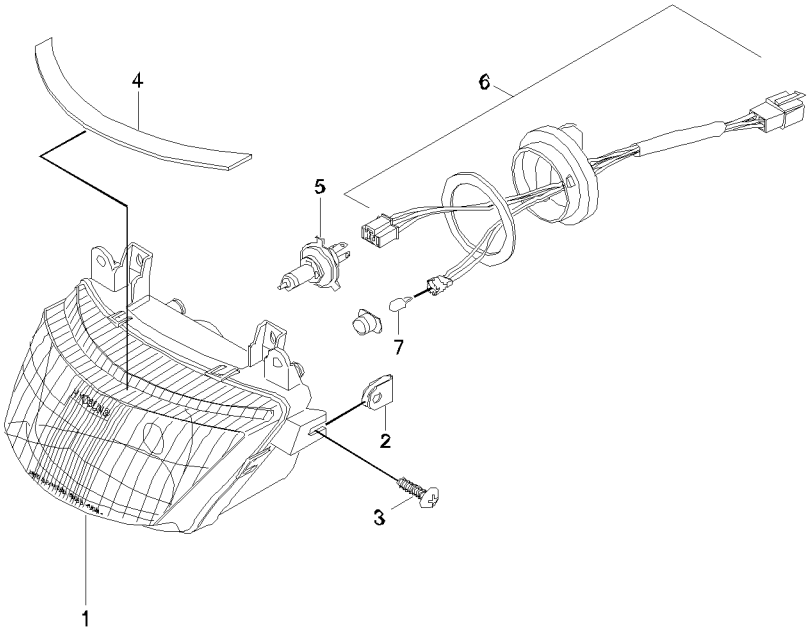

FIG. 22 HEAD LAMP

REF. No.	PARTS NUMBER	PARTS NAME	Q'TY
22-01	35100HF4520	HEAD LAMP ASS'Y	1
22-02	09148-06020	NUT, head lamp(M6)	2
22-03	01514-06166	BOLT, head lamp(M6x6)	2
22-04	35192HL7300	CUSHION, head lamp	1
22-05	09471-12100	BULB, head lamp(12V HS1 35/35W)	1
22-06	35130HF4500	CORD ASS'Y	1
22-07	09471-12110	BULB, position lamp(12V5W)	1

FIG. 23

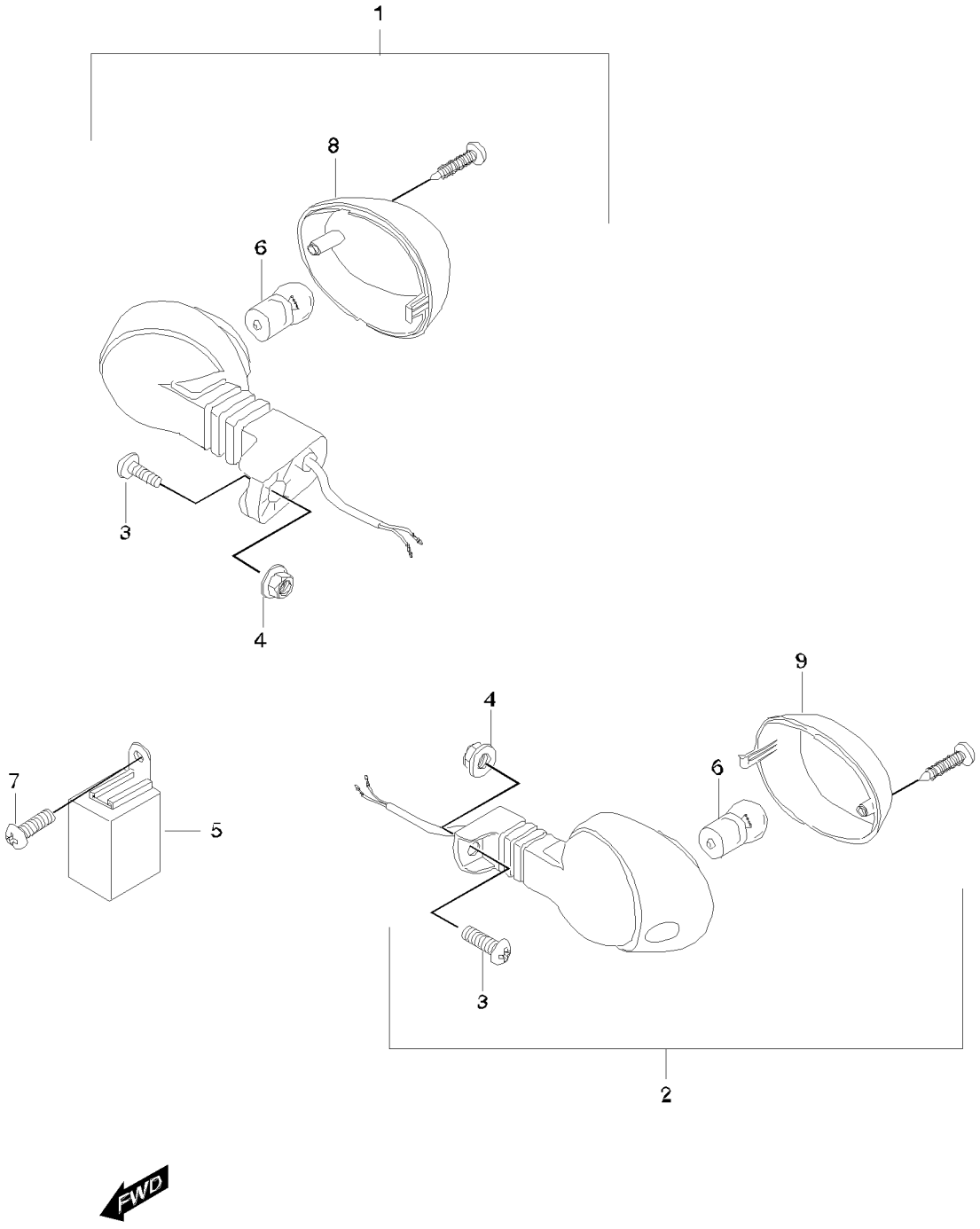

FIG. 23 REAR TURNSINAL LAMP

REF. No.	PARTS NUMBER	PARTS NAME	Q'TY
23-01	35603HL7300	LAMP ASS'Y, rear turnsignal,R	1
23-02	35604HL7300	LAMP ASS'Y, rear turnsignal,L	1
23-03	02142-06203	SCREW, rear turnsignal(M6X20)	2
23-04	08316-26066	NUT, rear turnsignal	2
23-05	38610HL7350	RELAY ASS'Y, hazard	1
23-06	09471-12142	BULB, rear turnsignal(12V R10W)	2
23-07	02112-06128	SCREW, hazard relay	1
23-08	35652HL7300	LENS, rear turnsignal R	1
23-09	35672HL7300	LENS, rear turnsignal L	1

FIG. 24

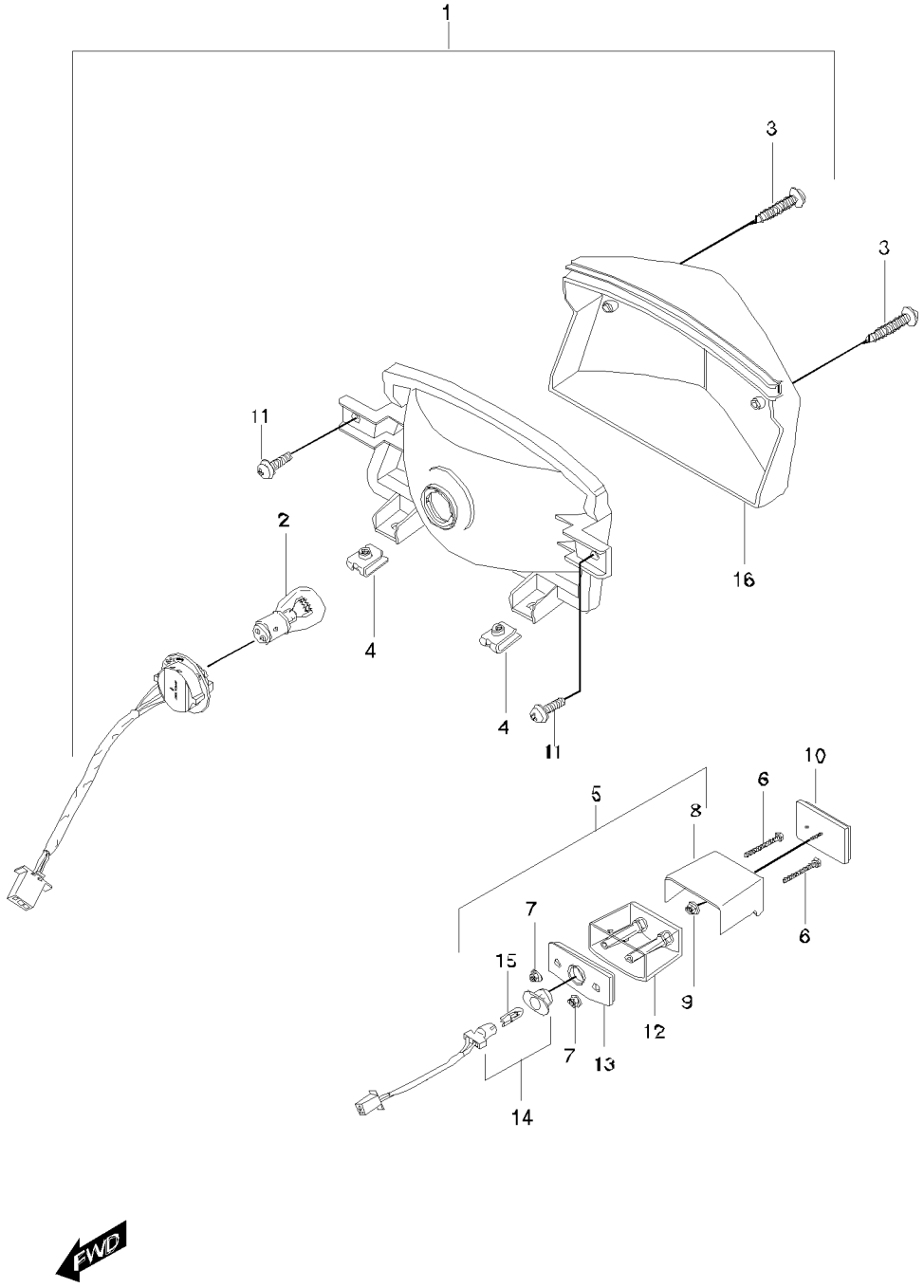

FIG. 24 REAR COMBINATION LAMP

REF. No.	PARTS NUMBER	PARTS NAME	Q'TY
24-01	35710HL7350	LAMP ASS'Y, tail & stop	1
24-02	09471-12047	BULB, tail & stop(12V.21/5W)	1
24-03	03511-04165	SCREW, tail & stop lens(M4x16)	2
24-04	09148-05039	NUT, tail & stop lamp(M5)	2
24-05	35910HL7350	LAMP ASS'Y, license plate	1
24-06	01107-05605	BOLT, license lamp(M5x60)	2
24-07	08316-26055	NUT, license lamp(M5)	2
24-08	35915HL7300	COVER, license lamp	1
24-09	08316-26055	NUT, rear reflex reflector(M5)	1
24-10	35970-17303	REFLEX REFLECTOR ASS'Y, rear	1
24-11	09136-05040	SCREW, tail & stop lamp	2
24-12	35911HG5800	LENS, license	1
24-13	35912HG5800	HOUSING, license	1
24-14	35916HG5800	CORD ASS'Y	1
24-15	09471-12150	BULB, license lamp(12V/5W)	1
24-16	35712HL7300	LENS, tail & stop lamp	1

FIG. 25

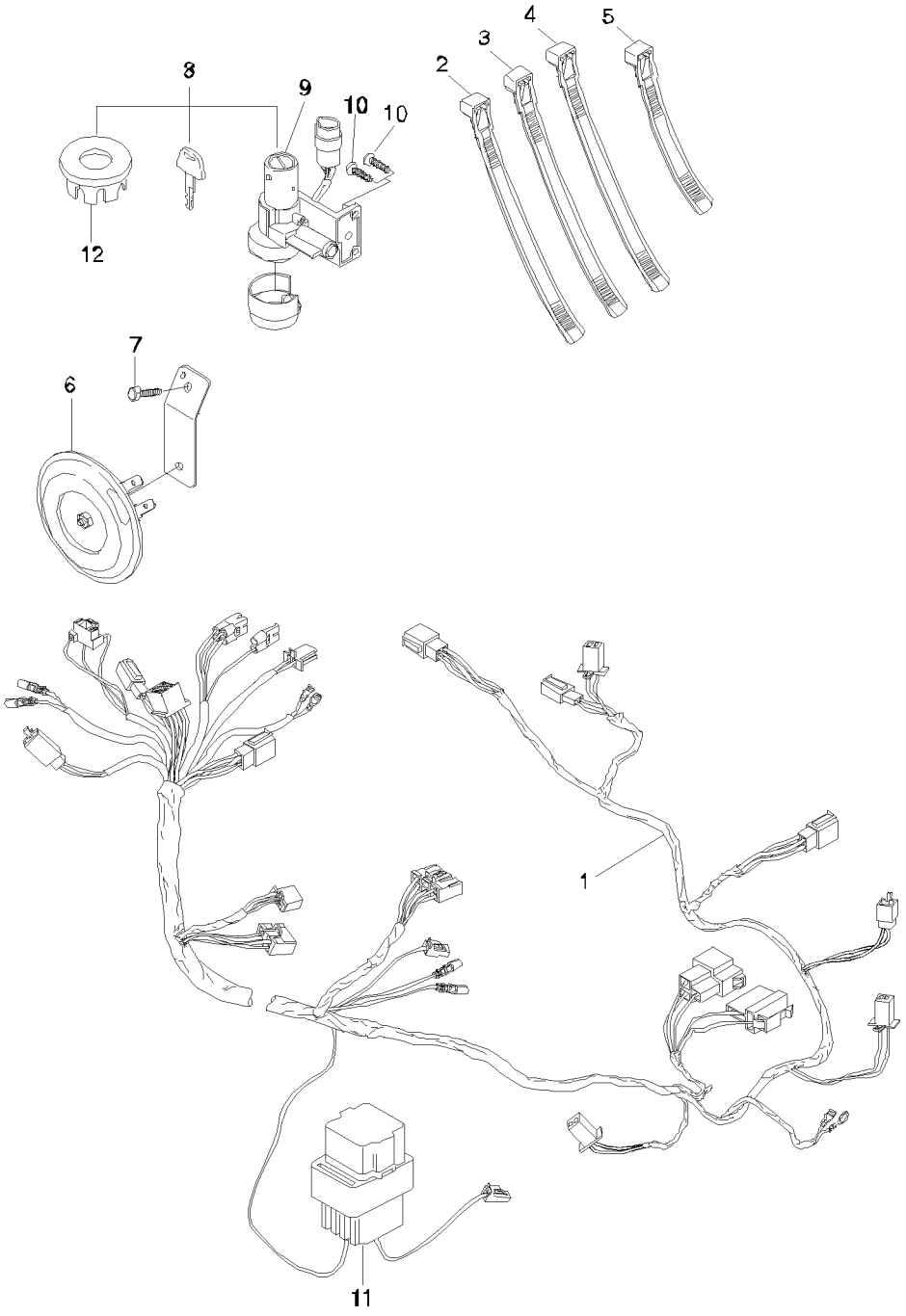

FIG. 25 WIRING HARNESS

REF. No.	PARTS NUMBER	PARTS NAME	Q'TY
25-01	36610HL7350	HARNESS,wiring	1
25-02	09407-254A1	CLAMP, wiring harness	7
25-03	09407-14403	CLAMP, wiring harness	3
25-04	09407-11401	CLAMP, wiring harness	2
25-05	09407-22402	CLAMP, wiring harness	3
25-06	38500HE7100	HORN ASS'Y	1
25-07	02112-36128	BOLT, horn(M6X12)	1
25-08	37000HG2610	KEY SET	1
25-09	09128-06005	SCREW, steering lock	2
25-10	37100HG2410	LOCK ASS'Y, steering	1
25-11	36740-35C00	.FUSE ASS'Y	1
25-12	37155HB1410	.CAP, steering lock	1

FIG. 26

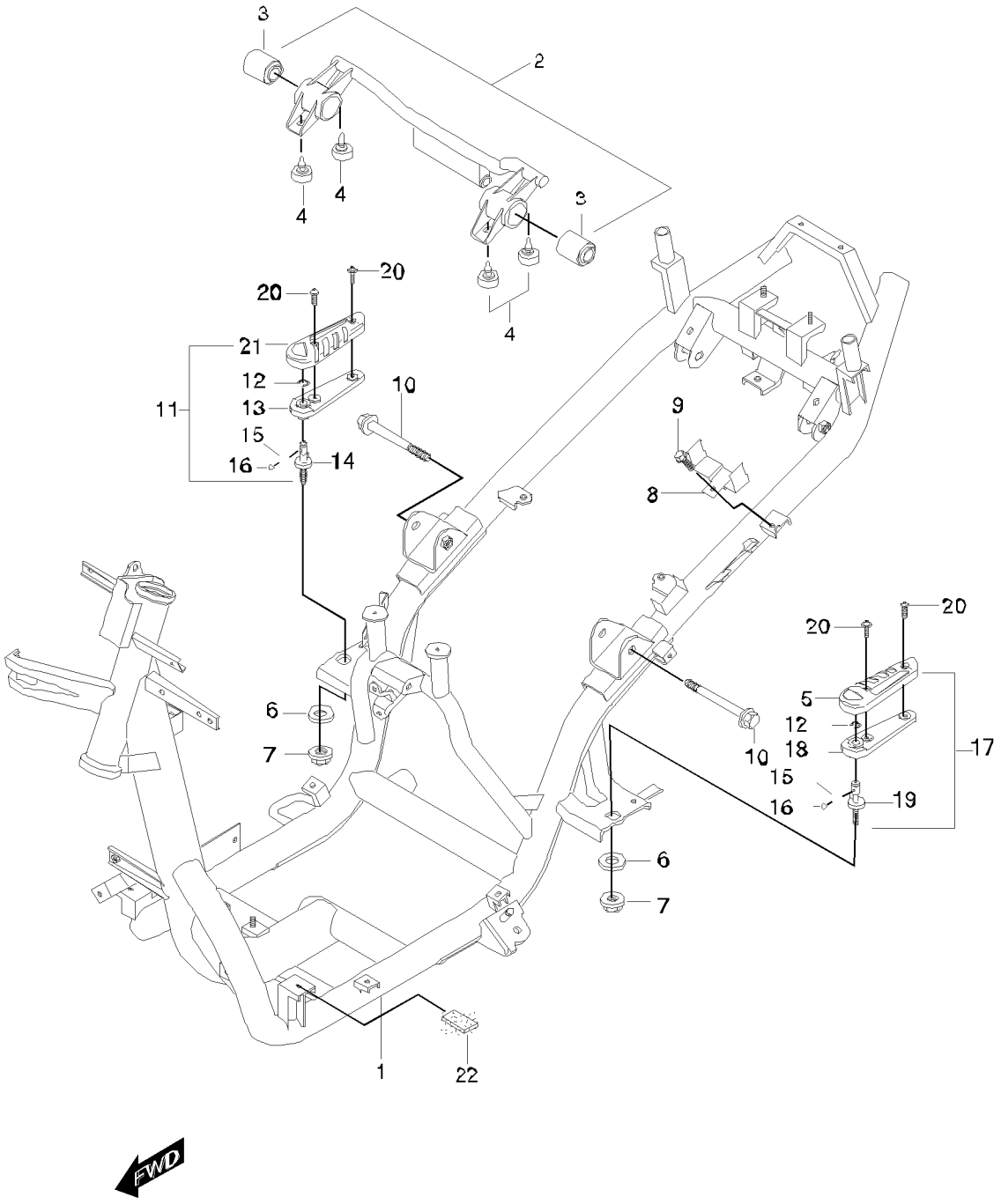
3
2
4
4
3
4
20
20
21
12
11
13
15
16
14
10
9
8
20
20
5
12
18
17
10
15
16
19
6
7
6
7
1
22
FWD

FIG. 26 FRAME

REF. No.	PARTS NUMBER	PARTS NAME	Q'TY
26-01	41100HL7302PAM	FRAME COMP	1
26-02	61100HL7302HPA	LINK ASS'Y, engine mtg	1
26-03	09139H12060	BUSH, engine mtg (L=50)	2
26-04	09321H12030	CUSHION, engine mtg link	4
26-05	43561HF4502	.RUBBER COMP, pillion footrest L	1
26-06	09160-10068	WASHER, frm & pillion brkt	2
26-07	08319-31106	NUT, frm & pillion brkt (M10)	2
26-08	41327HE6100	PLATE, cdi	1
26-09	01517-06128	BOLT, plate cdi(M6x2)	1
26-10	09103-12067	BOLT, engine mtg link (L=70)	2
26-11	43500HL7301	FOOTREST ASS'Y, pillion R	1
26-12	08332-11095	.E-RING, pillion footrest	2
26-13	43610HL7301	.PLATE, pillion footrest R	1
26-14	43821HL7300	.JOINT, pillion footrest R	1
26-15	09440-05005	.SPRING, pillion footrest	2
26-16	06112-07004	.BALL, pillion footrest	2
26-17	43600HL7301	FOOTREST ASS'Y, pillion L	1
26-18	43710HL7301	.PLATE, pillion footrest L	1
26-19	43831HL7300	.JOINT, pillion footrest L	1
26-20	02112-05165	SCREW, pillion footrest(M5x16)	4
26-21	43551HF4502	.RUBBER COMP, pillion footrest R	1
26-22	44215HF1601	CHSHION, frm & leg shield RR	1

FIG. 27

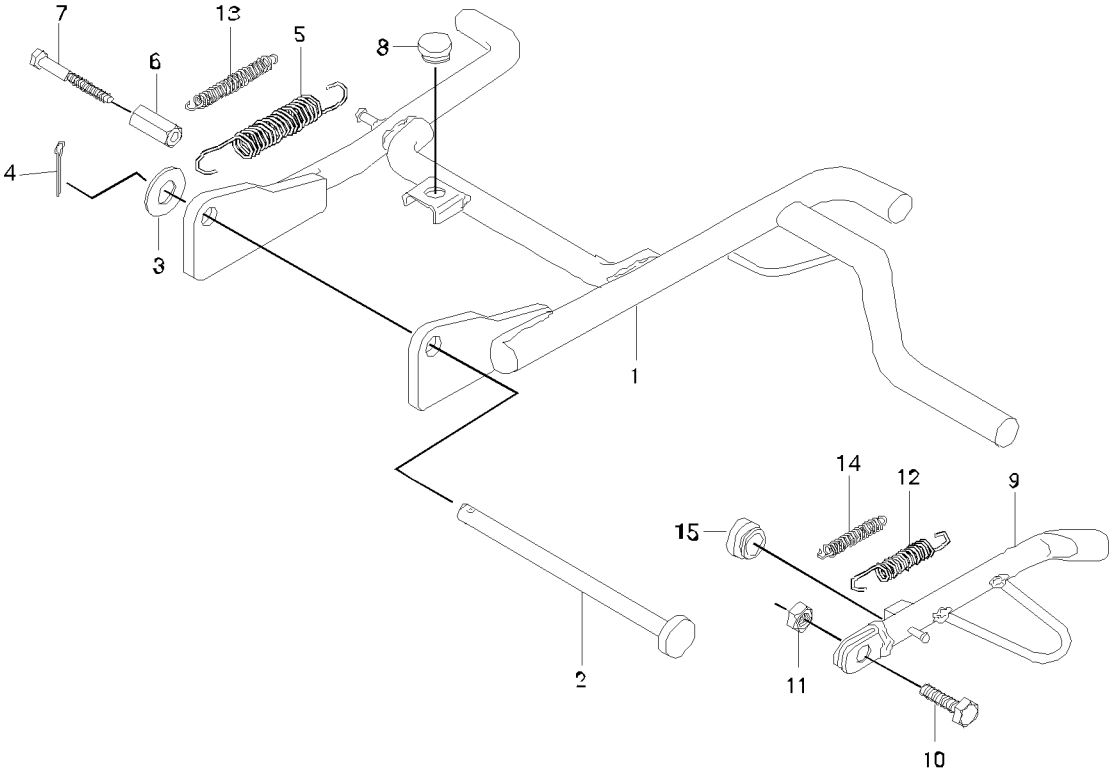

FIG. 27 CENTER STAND

REF. No.	PARTS NUMBER	PARTS NAME	Q'TY
27-01	42110HL7302	STAND COMP, center	1
27-02	42211HF4500	SHAFT, center stand pivot	1
27-03	08322-11106	WASHER, center stand	1
27-04	09204-02003	COTTER PIN, center stand	1
27-05	09443H17005	SPRING, cneter stand	1
27-06	09140-06007	NUT, center stand spring(M6)	1
27-07	09100-06078	BOLT, center stand spring(M6x25)	1
27-08	09321-10002	CUSHION, center stand	1
27-09	42310HL7303	STAND COMP, prop	1
27-10	09100-10031	BOLT, prop stand(M10x30)	1
27-11	08310-11108	NUT, prop stand(M10)	1
27-12	09443-14036	SPRING, prop stand	1
27-13	09443-10001	SPRING, center stand inner	1
27-14	09443-06001	SPRING, prop stand inner	1
27-15	09321-10002	CUSHION, prop stand	1

FIG. 28

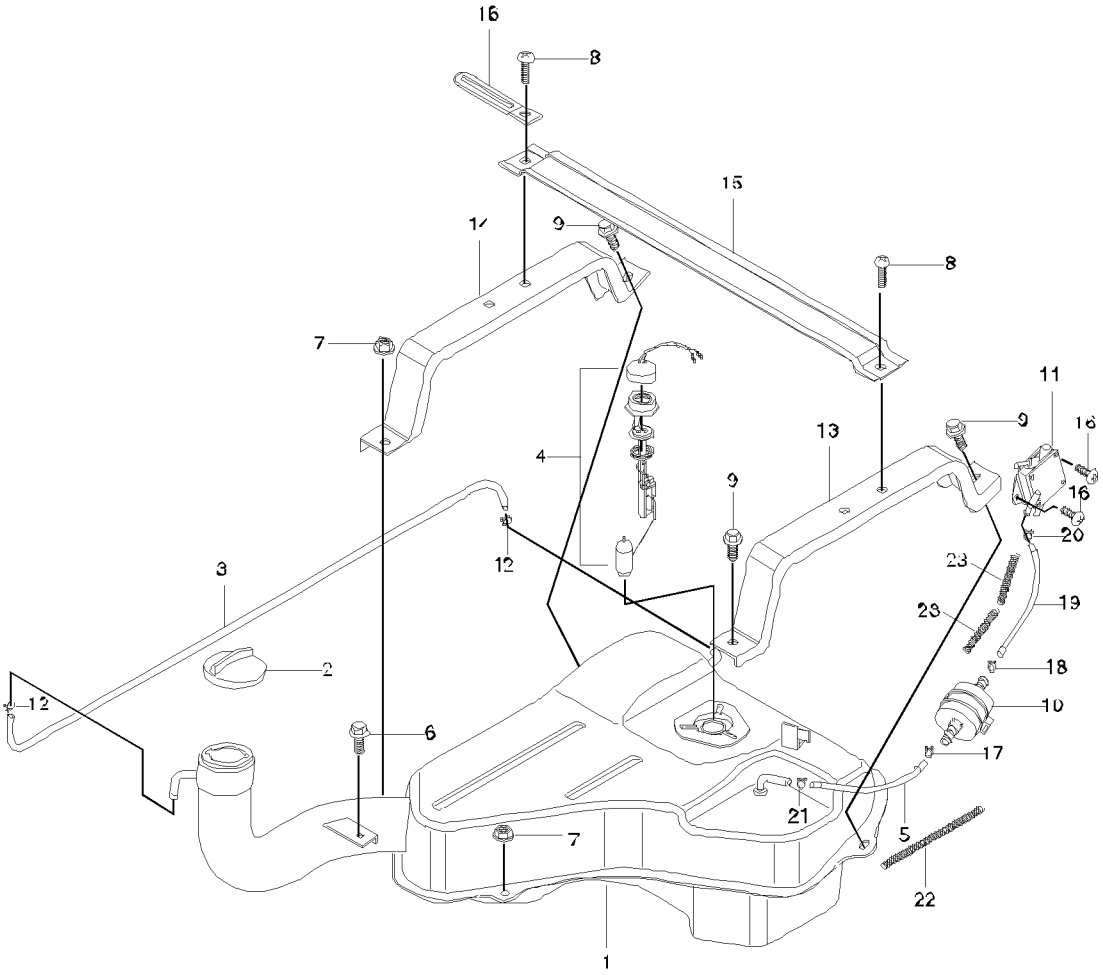
16
8
15
14
9
8
7
11
9
16
13
4
9
16
20
12
23
3
19
28
2
18
12
10
6
17
21
5
7
22
1

FWD

FIG. 28 FUEL TANK

REF. No.	PARTS NUMBER	PARTS NAME	Q'TY
28-01	44110HL7305PAM	TANK COMP, fuel	1
28-02	44200HK2700	CAP SET, fuel tank	1
28-03	44236HL7302	HOSE, air vent	1
28-04	34810HL7300	GAUGE ASS'Y, fuel sender	1
28-05	44199HL7302	HOSE, fuel strainer inlet(L=170)	1
28-06	01517-06125	BOLT, fuel tank innet(M6x12)	1
28-07	08316-26066	NUT, leg shield rr &fuel tank(M6)	2
28-08	02142-06126	BOLT, leg shield rr ctr plate(M6x12)	2
28-09	01517-06125	BOLT, leg shield rr plate(M6x12)	3
28-10	44910HG2600	STRAINER COMP, fuel	1
28-11	15100HG2600	PUMP ASS'Y fuel	1
28-12	09401H11401	CLIP, fuel inlet air vent hose	2
28-13	41553HL7300	PLATE, leg shield rr L	1
28-14	41552HL7300	PLATE, leg shield rr R	1
28-15	41551HL7300	PLATE, leg shield rr center	1
28-16	02112-06166	SCREW, fuel pump(M6x16)	2
28-17	09401-10401	CLIP, fuel inlet hose No2	1
28-18	09401-10401	CLIP, fuel outlet hose No1	1
28-19	44197HL7300	HOSE, fuel strainer outlet(L=350)	1
28-20	09401H11401	CLIP, fuel outlet hose No2	1
28-21	09401H11401	CLIP, fuel inlet hose No1	1
28-22	09440-13019	SPRING, fuel strainer inlet hose (L=180)	1
28-23	09440-13019	SPRING, fuel strainer outlet hose (L=180)	2

FIG. 29

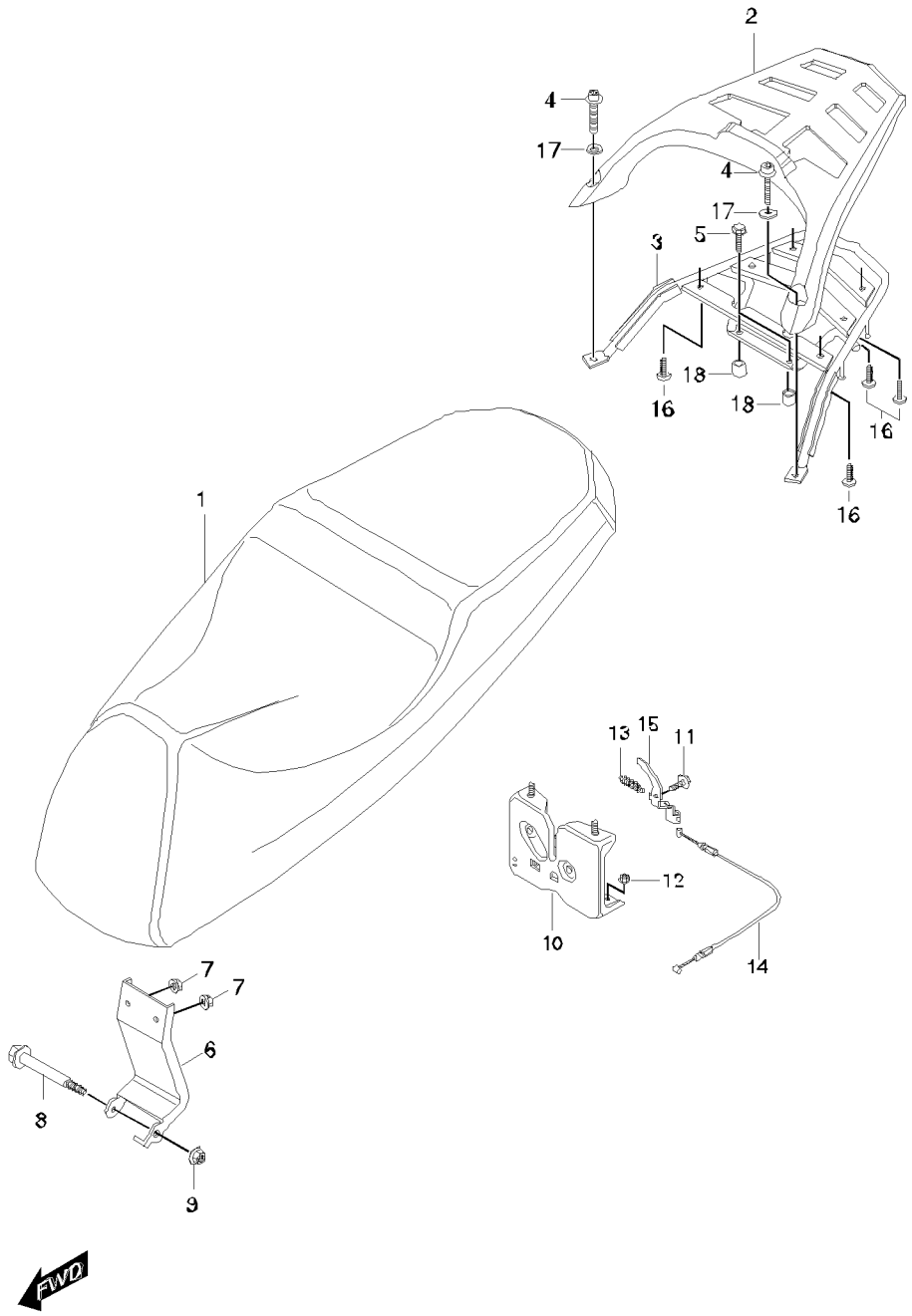

FIG. 29 SEAT

REF. No.	PARTS NUMBER	PARTS NAME	Q'TY
29-01	45100HL7302	SEAT SET, front	1
29-02	46410HL73010S3	COVER COMP, rear carrier	1
29-03	46420HL7302	CARRIER COMP, rear	1
29-04	07110-08708	BOLT, carrier cover & carrier (M8x70)	2
29-05	01517-06258	BOLT, rear carrier & frm (M6x25)	2
29-06	45285HL7301	BRACKET, seat support	1
29-07	08316-16068	NUT, brkt seat support(M6)	2
29-08	09111H06014	BOLT, seat support bracket	1
29-09	08316-16068	NUT, seat support bracket	1
29-10	45220HG2601	LOCK, seat striker	1
29-11	09111-06019	BOLT, seat striker & frm	1
29-12	08316-26066	NUT, seat striker lock(M6)	2
29-13	09443H06006	SPRING, seat striker lock NO.3 & frm	1
29-14	45280HL7300	CABLE ASS'Y, seat lock	1
29-15	45551HL7300	PLATE, seat striker lock NO.3	1
29-16	02142-06108	SCREW, rr carrier & cover(M6×10)	4
29-17	08322-11088	WASHER, carrier cover & carrier	2
29-18	09180H06067	SPACER, carrier & side cover	2

FIG. 30

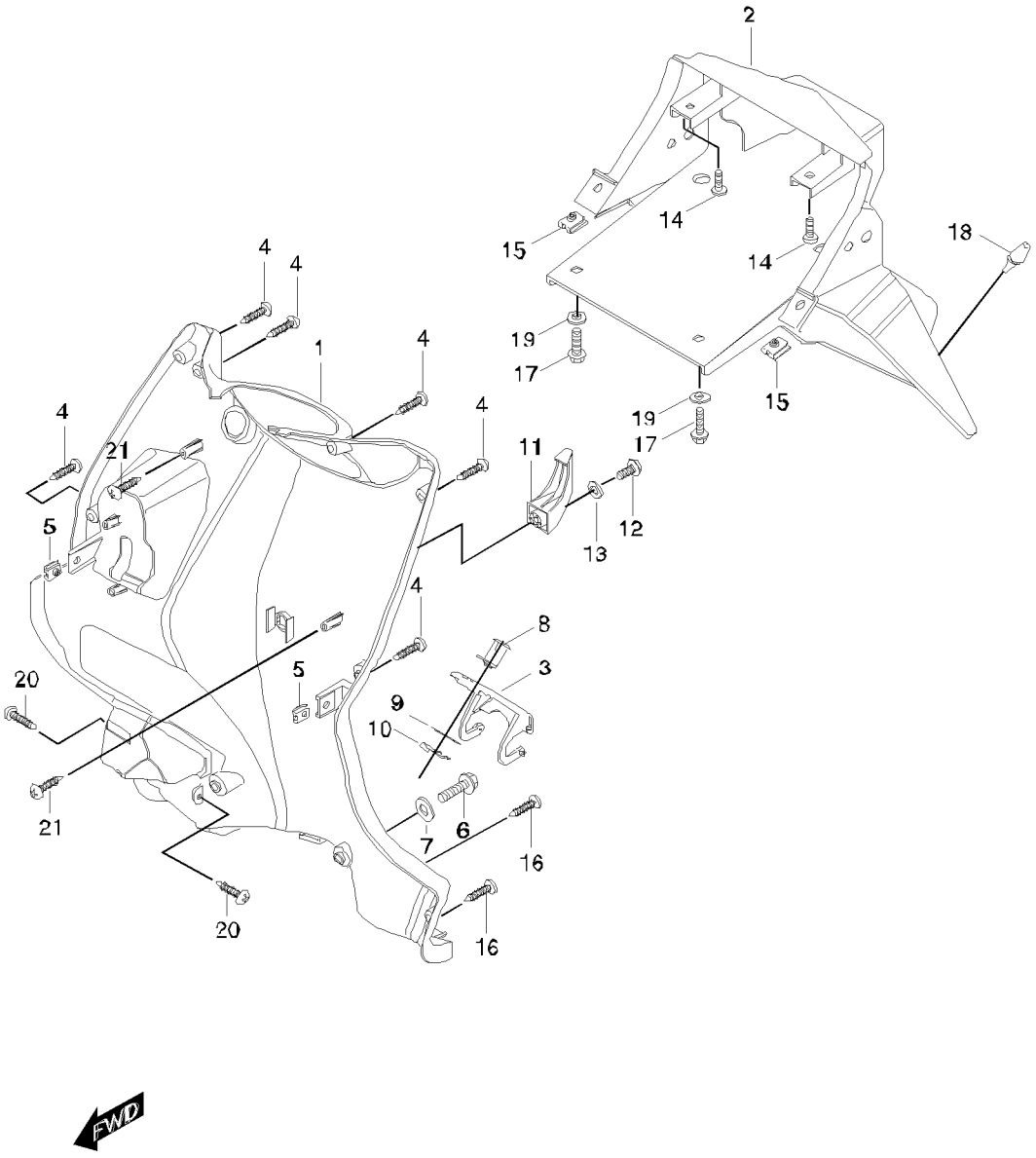
2
14
15
14
18
4
4
1
4
19
17
15
4
4
19
17
21
11
12
5
13
4
8
3
20
5
9
10
21
6
7
16
20
16
FWD

FIG. 30 COVER LEGSHIELD & REAR FENDER

REF. No.	PARTS NUMBER	PARTS NAME	Q'TY
30-01	92111HL730126B	COVER, leg shield	1
30-02	63111HL7301	FENDER, rear upper	1
30-03	92112HL730226B	COVER, fuel tank & leg shield	1
30-04	03241-05166	SCREW, leg shield cover & front(M5x16)	6
30-05	09148-05039	NUT, leg shield lower front & leg shield cover	2
30-06	01517-06205	BOLT, leg shield cover & frame(M6x20)	2
30-07	09160-06056	WASHER, leg shield cover & frame	2
30-08	44200HF4510	LOCK ASS'Y, fuel tank	1
30-09	92413HF4501	WASHER, fuel tank cover	1
30-10	92414HF4500	LOCK, fuel tank key	1
30-11	92113HL730026B	HOOK, leg shield cover	1
30-12	02142-06255	SCREW, leg shield cover hook(M6x25)	1
30-13	09160-06019	WASHER, leg shield cover hook	1
30-14	02142-05166	SCREW, rear fender up & rear combi(M5x16)	2
30-15	09148-05039	NUT, rear fender up	2
30-16	03241-04166	SCREW, leg shield cover & lower ft	4
30-17	01517-06166	BOLT, rear fender up & frame ft(M6x16)	2
30-18	09321-06023	CUSHION, license plate	1
30-19	09169-06032	WASHER, rear fender up & frame ft	2
30-20	03241-04128	SCREW, leg shield cover & fuel tank cover(M4x2)	2
30-21	03241-05166	SCREW, frame & leg shield cover(M5x16)	2

FIG. 31

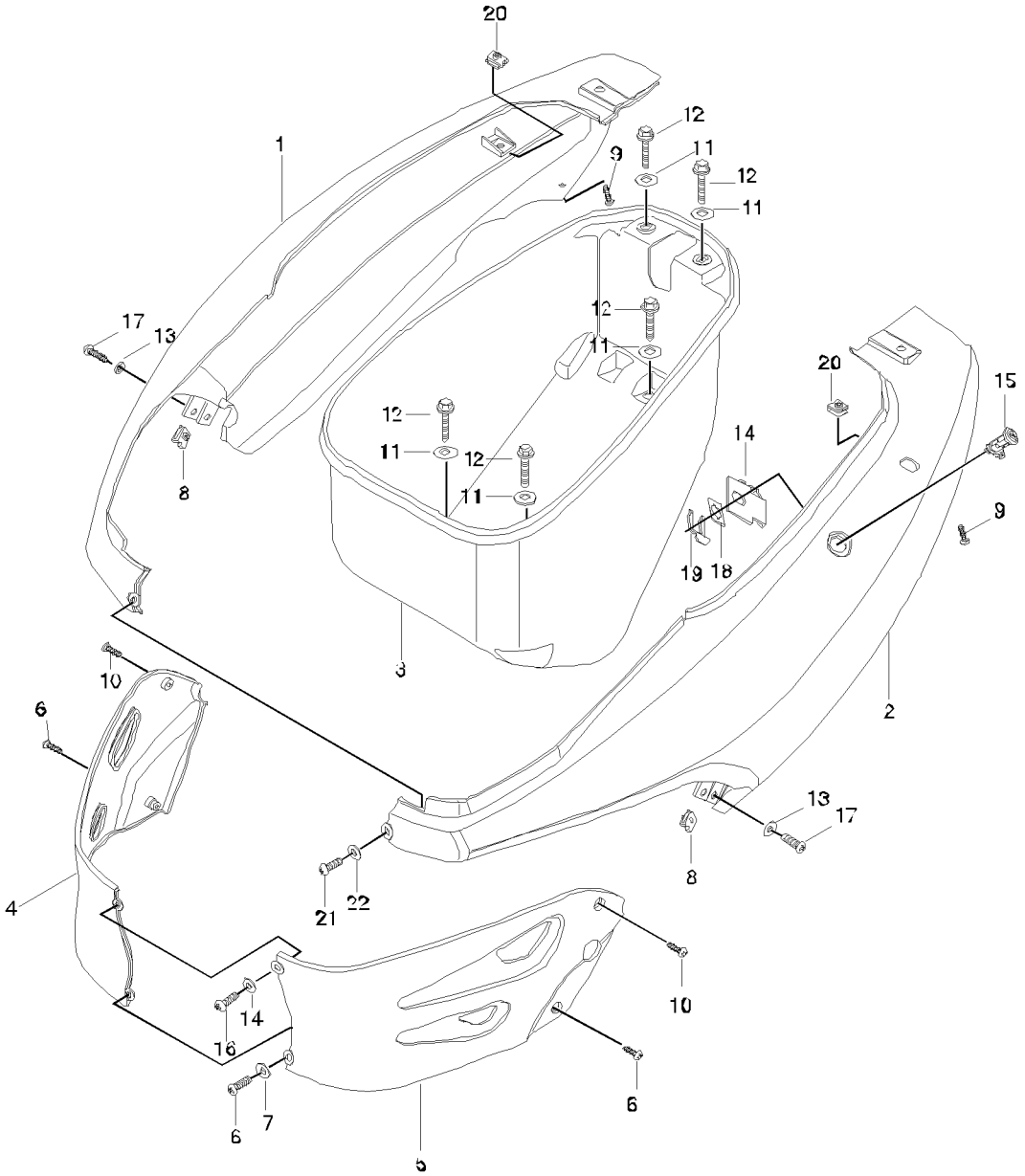
20
12
11
12
11
9
1
17
13
12
11
20
15
12
11
12
11
14
8
9
19
18
3
10
6
2
13
17
8
4
21
22
10
14
16
6
6
7
5

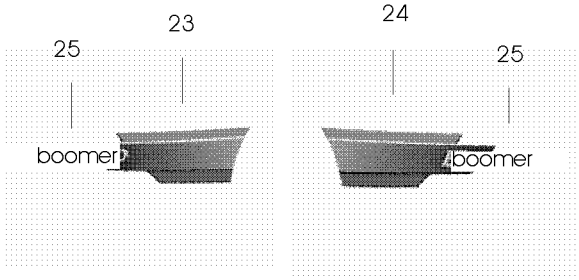
23
25
boomer
24
25
boomer

FWD

FIG. 31 SIDE COVER

REF. No.	PARTS NUMBER	PARTS NAME	Q'TY
31-01-01	47111HF73020DB	COVER, side R(DB)	1
31-01-02	47111HF73020MB	COVER, side R(MB)	1
31-01-03	47111HF73020PR	COVER, side R(PR)	1
31-01-04	47111HF7302CDB	COVER, side R(DB)-NO EMBLEM	1
31-01-05	47111HF7302CMB	COVER, side R(MB)-NO EMBLEM	1
31-01-06	47111HF7302CPR	COVER, side R(PR)-NO EMBLEM	1
31-02-01	47211HL73030DB	COVER, side L(DB)	1
31-02-02	47211HL73030MB	COVER, side L(MB)	1
31-02-03	47211HL73030PR	COVER, side L(PR)	1
31-02-04	47211HL7303CDB	COVER, side L(DB)-NO EMBLEM	1
31-02-05	47211HL7303CMB	COVER, side L(MB)-NO EMBLEM	1
31-02-06	47211HL7303CPR	COVER, side L(PR)-NO EMBLEM	1
31-03	91311HL730226B	BOX, helmet	1
31-04	47151HL730126B	COVER, side front R	1
31-05	47251HL730226B	COVER, side front L	1
31-06	02142-06166	SCREW, side cover ft & leg shield rr	3
31-07	09160-06057	WASHER, side cover ft & frame ft up	1
31-08	09148-05039	NUT, side cover(M5)	4
31-09	02142-05166	SCREW, side cover & rr fender up(M5x16)	2
31-10	02142-05166	SCREW, side cover front(M5x16)	2
31-11	09160-06006	WASHER, helmet box ft	5
31-12	01517-06168	BOLT, helmet box(M6x16)	5
31-13	09169-06032	WASHER, side cover & frame ctr	2
31-14	09160-06057	WASHER, side cover ft & frame ft up	1
31-15	45700HG2610	LOCK ASS'Y, seat	1
31-16	02142-06166	SCREW, side cover ft & frame ft up	1
31-17	02142-06166	SCREW, side cover & frame center	2
31-18	92413HF4501	WASHER, key set	1
31-19	92414HF4500	LOCK KEY, set	1
31-20	09148-05039	NUT, side cover rear	2
31-21	02142-06166	SCREW, side cover & frame ft	1
31-22	09160-06057	WASHER, side cover & frame ft	1
31-23-01	68134HL730000A	TAPE, side cover R(PR)	1
31-23-02	68134HL730000B	TAPE, side cover R(DB,MB)	1
31-24-01	68136HL730000A	TAPE, side cover L(PR)	1
31-24-02	68136HL730000B	TAPE, side cover L(DB,MB)	1
31-25	68130HL7300CR	EMBLEM, side cover	2

FIG. 32

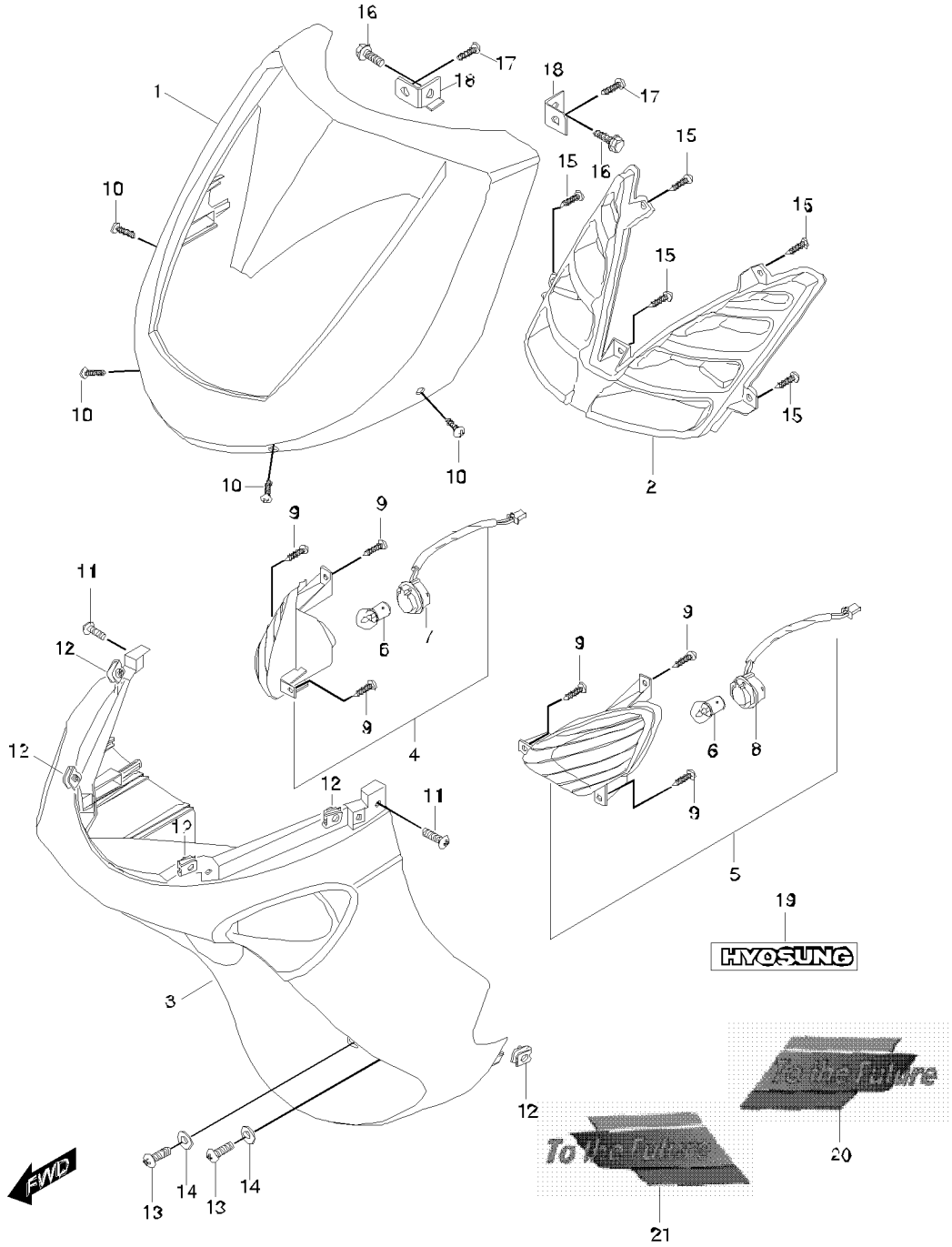
1
2
3
4
5
6
7
8
9
10
11
12
13
14
15
16
17
18
19
20
21
HYOSUNG
To the Future
To the Future
FWD

FIG. 32 LEG SHIELD FRONT

REF. No.	PARTS NUMBER	PARTS NAME	Q'TY
32-01-01	48111HL73500DB	SHIELD, leg front(DB)	1
32-01-02	48111HL73500MB	SHIELD, leg front(MB)	1
32-01-03	48111HL73500PR	SHIELD, leg front(PR)	1
32-01-04	48111HL7302CDB	SHIELD, leg front(DB)-NO EMBLEM	1
32-01-05	48111HL7302CMB	SHIELD, leg front(MB)-NO EMBLEM	1
32-01-06	48111HL7302CPR	SHIELD, leg front(PR)-NO EMBLEM	1
32-02-01	48211HL73020DB	DECO, leg shield front(DB)	1
32-02-02	48211HL73020MB	DECO, leg shield front(MB)	1
32-02-03	48211HL73020PR	DECO, leg shield front(PR)	1
32-03-01	48137HL73020DB	SHIELD, leg lower front(DB)	1
32-03-02	48137HL73020MB	SHIELD, leg lower front(MB)	1
32-03-03	48137HL73020PR	SHIELD, leg lower front(PR)	1
32-03-04	48137HL7302CDB	SHIELD, leg lower front(DB)-NO EMBLEM	1
32-03-05	48137HL7302CMB	SHIELD, leg lower front(MB)-NO EMBLEM	1
32-03-06	48137HL7302CPR	SHIELD, leg lower front(PR)-NO EMBLEM	1
32-04	35601HL7350	LAMP ASS'Y, front turnsignal R	1
32-05	35602HL7350	LAMP ASS'Y, front turnsignal L	1
32-06	09471-12103	.BULB, front turnsignal (12V10W)	2
32-07	35618HL7300	.SOCKET ASS'Y, front turnsignal R	1
32-08	35638HL7300	.SOCKET ASS'Y, front turnsignal L	1
32-09	03241-05165	SCREW, turnsignal lamp(M5×16)	6
32-10	02142-05166	SCREW, leg shield front & leg low fr(M5×16)	4
32-11	02142-05166	SCREW, leg shield low ft ft & cov leg(M5×16)	2
32-12	09148-05039	NUT, leg shield low ft(M5)	6
32-13	02142-06166	SCREW, leg shield low ft center(M6×16)	2
32-14	09169-06032	WASHER, leg shield low ft center	2
32-15	03241-05166	SCREW, deco & leg shield ft(M5×16)	5
32-16	01517-06166	BOLT, head lamp plate & head lamp(M6×16)	2
32-17	02142-06166	SCREW, head lamp plate & leg shield ft(M6×16)	2
32-18	48112HL7301	PLATE, head lamp & leg ft	2
32-19	68120HL730003P	EMBLEM, leg shield front	1
32-20-01	68314HL730000A	TAPE, leg shield low R(PR)	1
32-20-02	68314HL730000B	TAPE, leg shield low R(DB,MB)	1
32-21-01	68136HL730000A	TAPE, leg shield low L(PR)	1
32-21-02	68136HL730000B	TAPE, leg shield low L(DB,MB)	1

FIG. 33

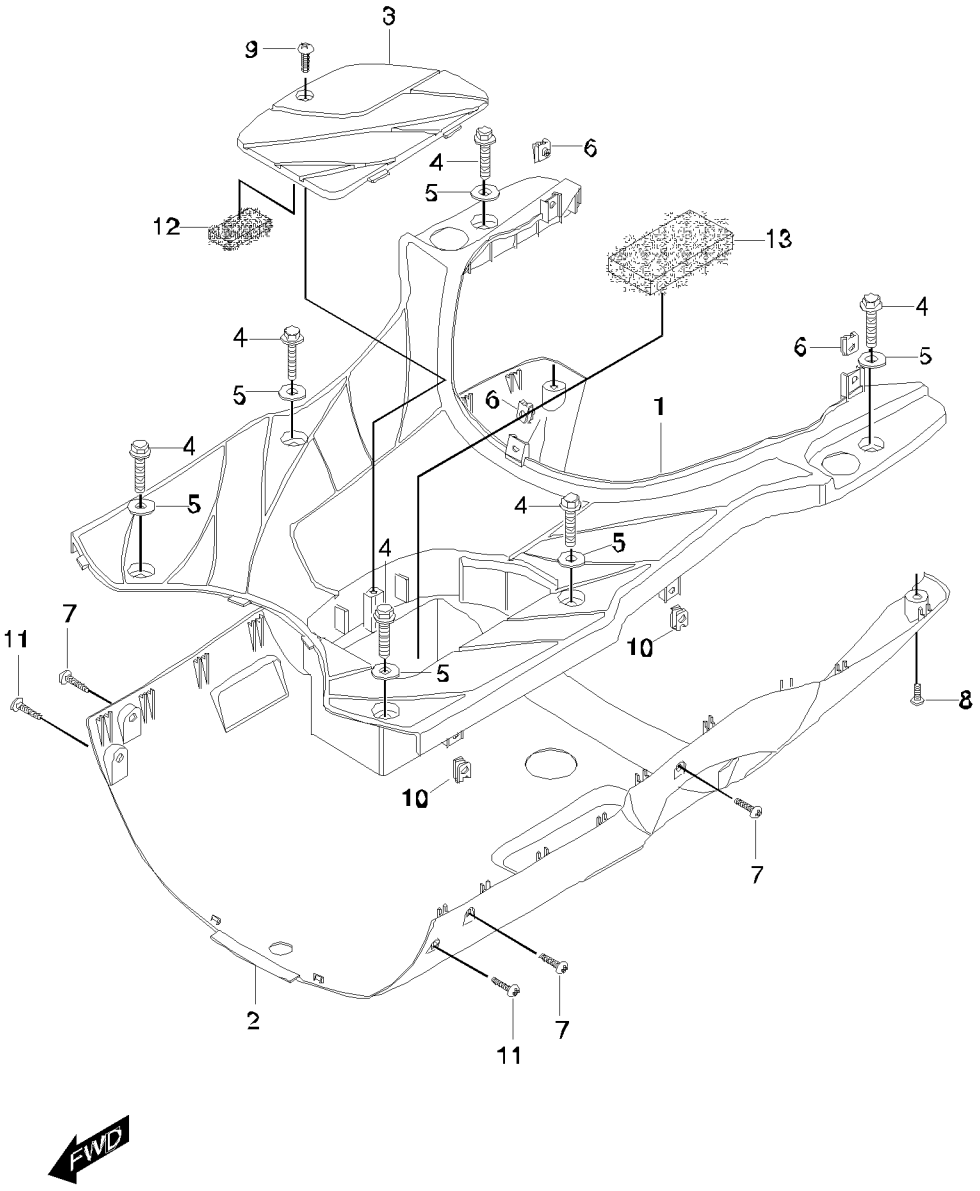

FIG. 33 LEG SHIELD REAR

REF. No.	PARTS NUMBER	PARTS NAME	Q'TY
33-01	48121HL7303	SHIELD, leg rear	1
33-02-01	48147HL73020DB	SHIELD, leg lower rear(DB)	1
33-02-02	48147HL73020MB	SHIELD, leg lower rear(MB)	1
33-02-03	48147HL73020PR	SHIELD, leg lower rear(PR)	1
33-03	48122HL7300	COVER, battery	1
33-04	01517-06205	BOLT, leg shield rr & frame(M6x20)	6
33-05	09160-06056	WASHER, leg shield rr & frame	6
33-06	09148-05039	NUT, leg shield rr & side cover ft(M5)	3
33-07	02142-05166	SCREW, leg shield low & leg shield rr(M5x16)S	4
33-08	03241-05166	CREW, leg shield low & leg shield rr(M5x16)	2
33-09	02142-06166	SCREW, battery cover(M6x16)	1
33-10	09148-05039	NUT, leg shield rr & lower(M5)	4
33-11	02142-05166	SCREW, leg shield lower rr & lower ft(M5x16)	2
33-12	44613HE7100	CUSHION, battery cover	1
33-13	41589HG5900	CUSHION, leg shield rr & battery	1

FIG. 34

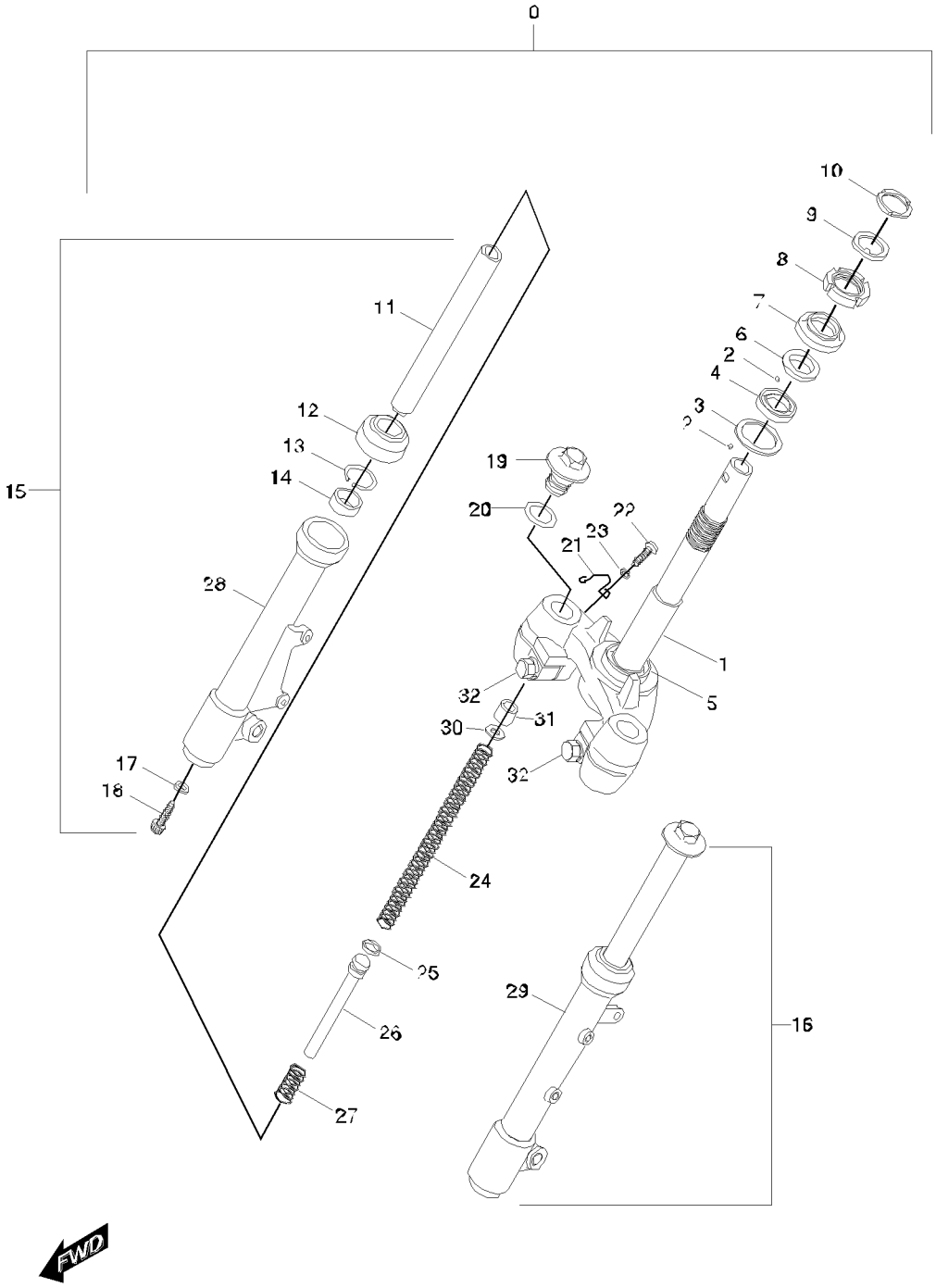
0
10
9
8
7
6
2
4
3
11
12
13
14
15
19
20
22
23
21
28
1
5
32
31
30
32
17
18
24
25
26
29
16
27
FWD

FIG. 34 FRONT FORK

REF. No.	PARTS NUMBER	PARTS NAME	Q'TY
34-00	51100HL7300HPA	FORK ASS'Y, front	1
34-01	51412HL7300	STEM, front fork steering	1
34-02	06111-06004	BALL, steering steel	47
34-03	51612-04000	RACE, steering inner lower	1
34-04	51611-20002	RACE, steering inner upper	1
34-05	51622-04000	RACE, steering outer lower	1
34-06	51621-28000	RACE, steering outer upper	1
34-07	51643-25001	DUST SEAL, steering upper	1
34-08	51631-28000	NUT, steering stem(M25)	1
34-09	09166-26001	WASHER, steering stem lock	1
34-10	51632-02400	NUT, steering stem lock(M25)	1
34-11	51111HF4500	FORK, pipe	2
34-12	51173HF4500	DUST	2
34-13	51156HF4500	STOPPER RING, oil seal	2
34-14	51153HF4500	OIL SEAL, front fork	2
34-15	51210HL7300	DAMPER ASS'Y, front fork R	1
34-16	51220HL7300	DAMPER ASS'Y, front fork L	1
34-17	90544H93B00	WASHER	1
34-18	51147HF4500	BOLT SOCKET	2
34-19	51351HF4500	BOLT FORK	2
34-20	51181HF4500	O-RING, fork bolt	2
34-21	51452HE6101	GUIDE, brake hose	1
34-22	02112-46168	SCREW, brake hose guide(M46x16)	1
34-23	51353HF4500	WASHER, under bracket	2
34-24	51171HL7300	SPRING	2
34-25	51196HF4500	PISTON LING	2
34-26	51146HF4500	PIPE, seat	2
34-27	51177HF4500	REBOUND SPRING	2
34-28	51421HL7300	BOTTOM CASE, front fork R	1
34-29	51521HL7300	BOTTOM CASE, front fork L	1
34-30	51175HL7300	WASHER, main spring	2
34-31	51174HL7300	SPACER, main spring	2
34-32	07110-08258	BOLT, under brkt(M8x25)	2

FIG. 35

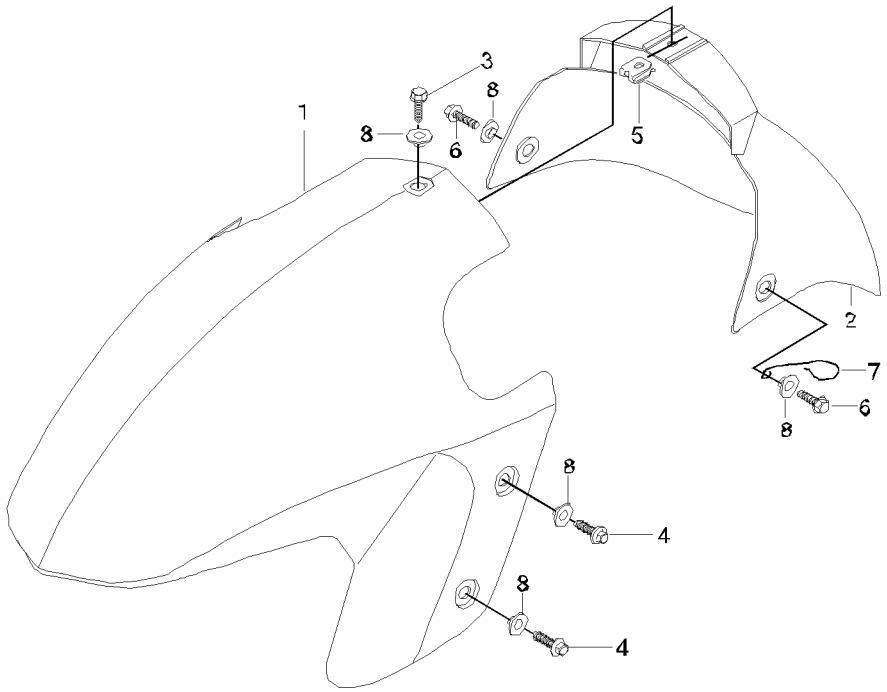

FIG. 35 FRONT FENDER

REF. No.	PARTS NUMBER	PARTS NAME	Q'TY
35-01-01	53111HL73000DB	FENDER, front front(DB)	1
35-01-02	53111HL73000MB	FENDER, front front(MB)	1
35-01-03	53111HL73000PR	FENDER, front front(PR)	1
35-02-01	53112HL73000DB	FENDER, front rear(DB)	1
35-02-02	53112HL73000MB	FENDER, front rear(MB)	1
35-02-03	53112HL73000PR	FENDER, front rear(PR)	1
35-03	01104-06205	BOLT, fender front front & rear(M6x20)	1
35-04	01517-06125	BOLT, fender front front(M6x12)	4
35-05	09148-06020	NUT, fender front rear(M6)	1
35-06	01517-06125	BOLT, fender front rear(M6x12)	2
35-07	58621H05300	GUIDE, speedometer cable	1
35-08	09169-06034	WASHER, fender front & rear	7

FIG. 36

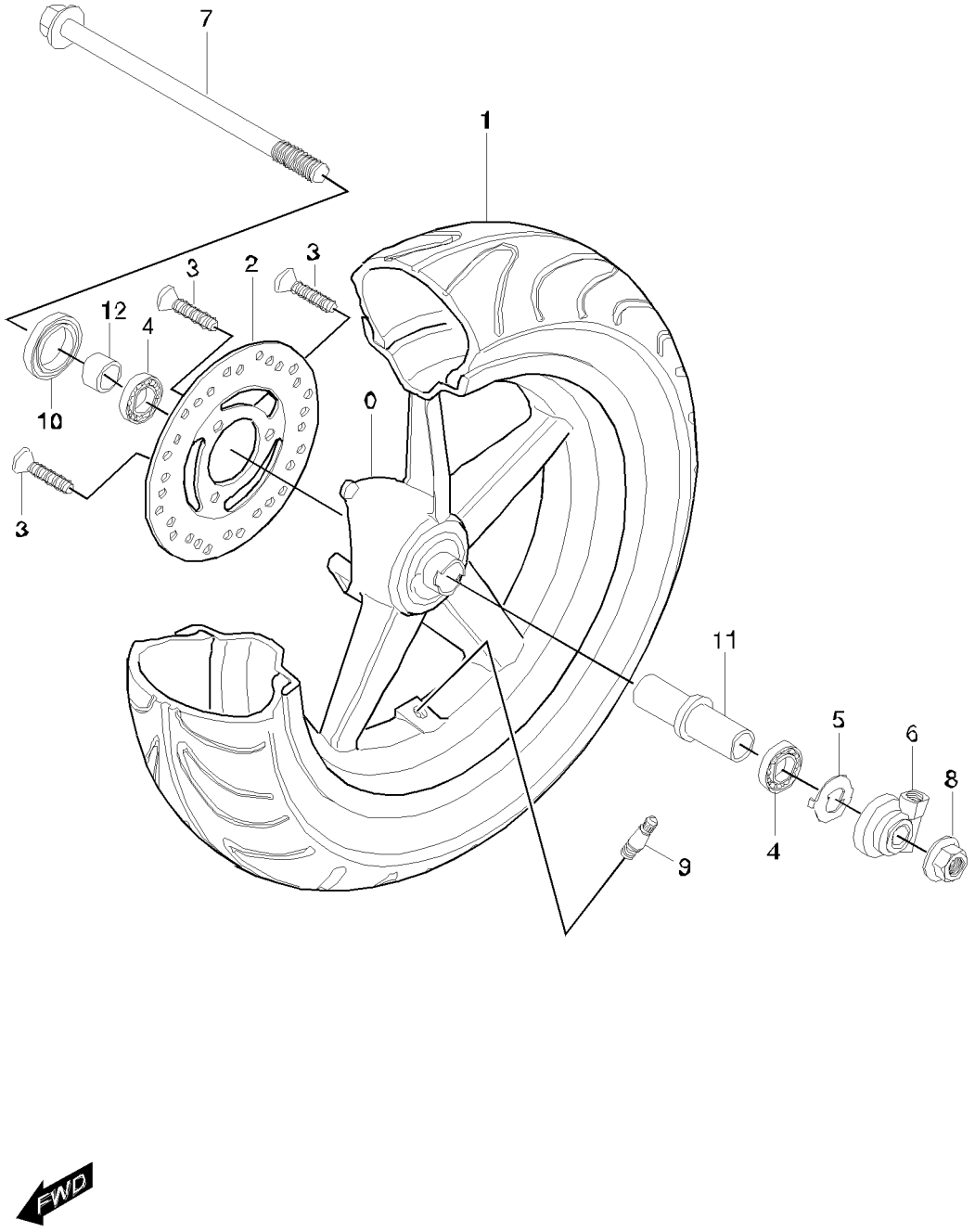

FIG. 36 FRONT WHEEL

REF. No.	PARTS NUMBER	PARTS NAME	Q'TY
36-00	54140HF4500	WHEEL COMP, front(3.00x12)	1
36-01	55109HF4500	TIRE SET, front(120/70-12 56J)	1
36-02	59211HF4530	DISC, front brake	1
36-03	59421-03A01	BOLT, front brake disc(M8x20)	3
36-04	08143-62017	BEARING, front wheel(6201Z)	2
36-05	09160-06065	THRUST WASHER, speedometer	1
36-06	54600HF4501	BOX ASS'Y, speedometer gear	1
36-07	54711HF4501	AXLE, front	1
36-08	08319-31128	NUT, front axle(M12)	1
36-09	55220-29C20	VALVE ASS'Y	1
36-10	09285H18001	DUST SEAL, front hub bearing	1
36-11	54730HF4500	SPACER COMP, front wheel	1
36-12	54741HF4500	SPACER, front axle L	1

FIG. 37

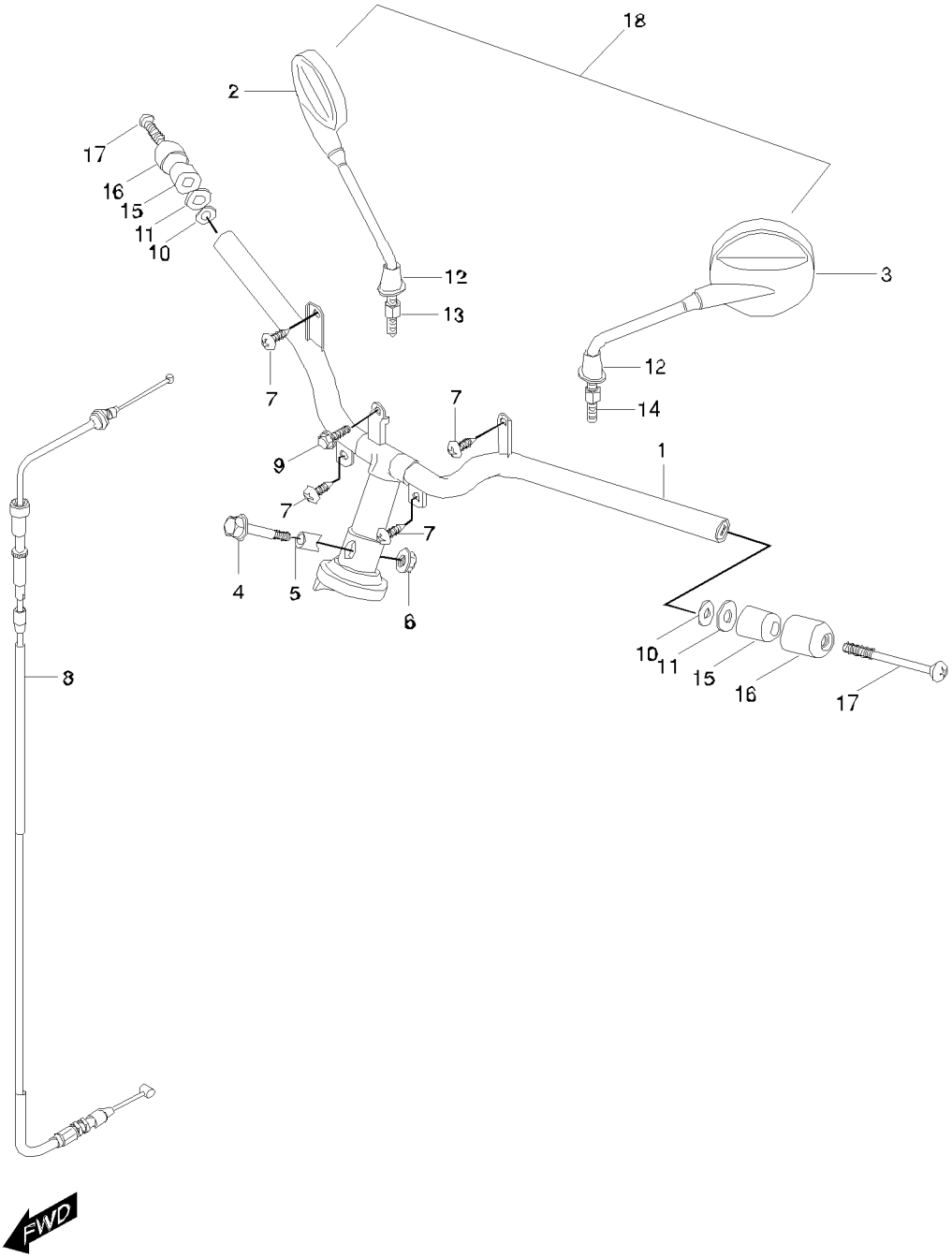

FIG. 37 HANDLE BAR

REF. No.	PARTS NUMBER	PARTS NAME	Q'TY
37-01	56100HL7301	HANDLE BAR COMP	1
37-02	56500HL7300	MIRROR ASS'Y, RR view,R	1
37-03	56600HL7300	MIRROR ASS'Y, RR view,L	1
37-04	09103H10101	BOLT, handle bar set(M10x53)	1
37-05	56213HE7100	SPACER, handle bar set	1
37-06	08319-31108	NUT, handle bar set(M10)	1
37-07	03241-05166	SCREW, handle bar & handle cover RR(M5×16)	4
37-08	58300HL7300	CABLE ASS'Y, throttle	1
37-09	01517-06166	SCREW, handle bar & turn signal(M6×16)	1
37-10	09160-06017	WASHER, handle balancer	2
37-11	56275-34400	SPACER, handle balancer	2
37-12	56520HL7300	CAP, mirror nut	2
37-13	56700HL7301	BOLT, RR view mirroir R	1
37-14	56800HL7301	BOLT, RR view mirroir L	1
37-15	56271-49400	BALANCER, handle bar	2
37-16	56274-05350	CAP, handle bar balancer	2
37-17	02132-06405	SCREW, handle bar balancer(M6×40)	2
37-18	56501HL7350	MIRROR SET	1

FIG. 38

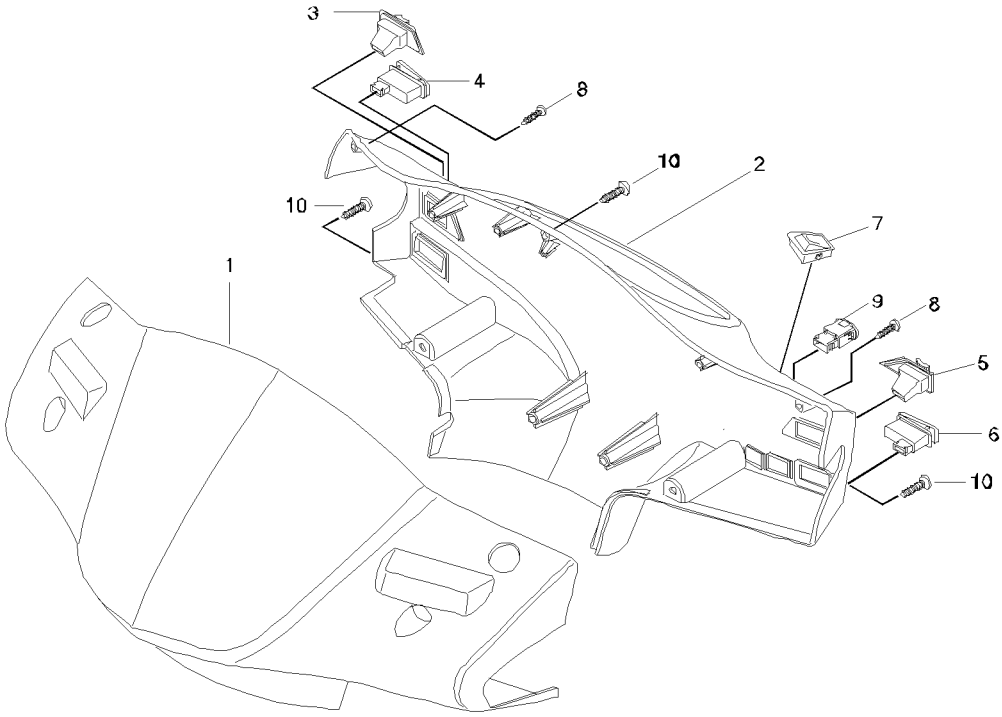

FIG. 38 HANDLE COVER

REF. No.	PARTS NUMBER	PARTS NAME	Q'TY
38-01-01	56311HL7350CDB	COVER, handle front(DB)	1
38-01-01	56311HL7350CMB	COVER, handle front(MB)	1
38-01-02	56311HL7350CPR	COVER, handle front(PR)	1
38-02	56321HL730126B	COVER, handle rear	1
38-03	37210HF4500	SWITCH ASS'Y, lighting	1
38-04	37220HE6100	SWITCH ASS'Y, start	1
38-05	37410HF4530	SWITCH ASS'Y, turn signal	1
38-06	37420HE6100	SWITCH ASS'Y, horn	1
38-07	37430HE6100	SWITCH ASS'Y, dimmer	1
38-08	03241-04166	SCREW, handle cover rr & ft(M4x16)	2
38-09	37860HL7300	SWITCH ASS'Y, hazard	1
38-10	03241-05166	SCREW, handle cover rr & handle cover ft(M5x16	3

FIG. 39

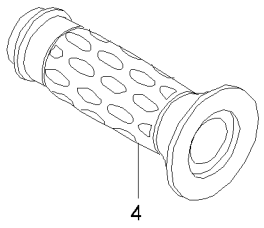

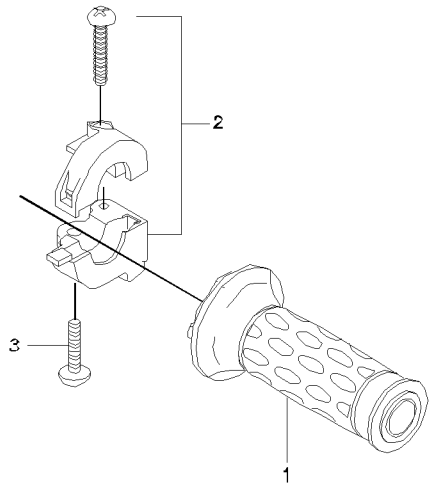

FIG. 39 HANDLE LEVER

REF. No.	PARTS NUMBER	PARTS NAME	Q'TY
39-01	57110HF4500	GRIP COMP, throttle	1
39-02	57100HF4500	CASE ASS'Y, throttle	1
39-03	09136-05040	SCREW, throttle	1
39-04	57211HF4500	GRIP, L	1

FIG. 40

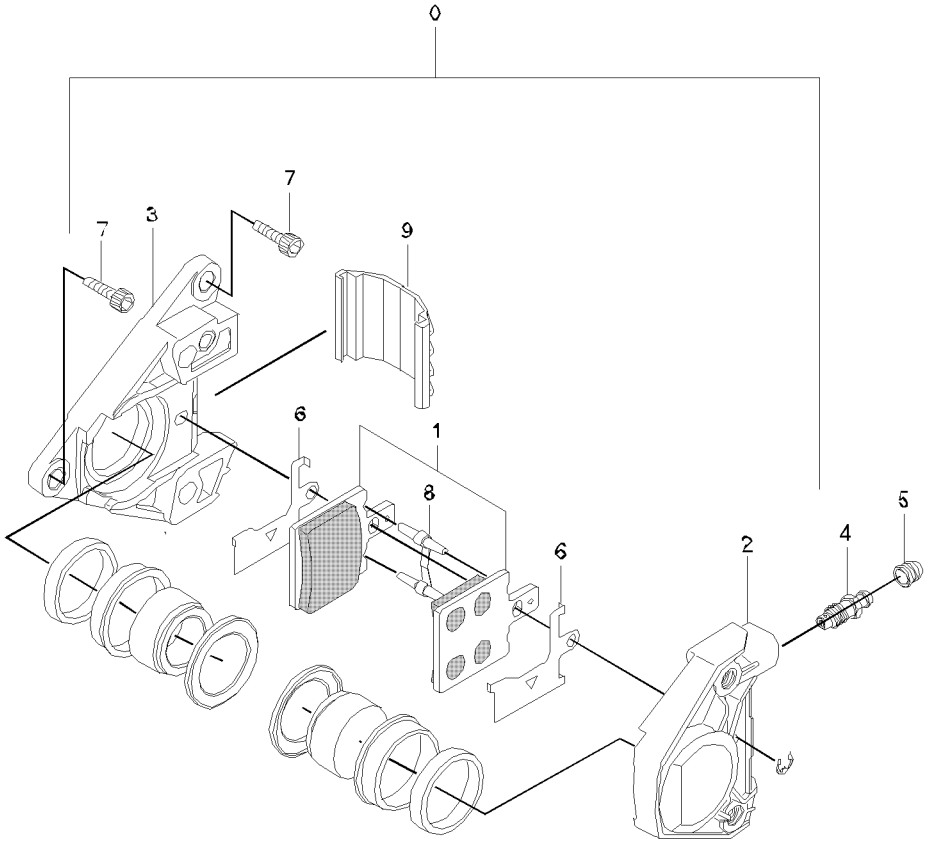

FIG. 40 CALIPER FRONT

REF. No.	PARTS NUMBER	PARTS NAME	Q'TY
40-00	59300HF4500	CALIPER ASS'Y	1
40-01	59311HF4500	PAD SET, caliper	1
40-02	59360HF4500	.HOUSING, caliper R	1
40-03	59370HF4500	.HOUSING, caliper L	1
40-04	59121HF4500	.BREATER	1
40-05	59122HF4500	.CAP, breater	1
40-06	59315HF4500	.SPRING	2
40-07	01177-08268	BOLT, caliper(M8x26)	2
40-08	59316HF4500	.GUIDE, pad	1
40-09	59317HF4500	.CAP, caliper	1

FIG. 41

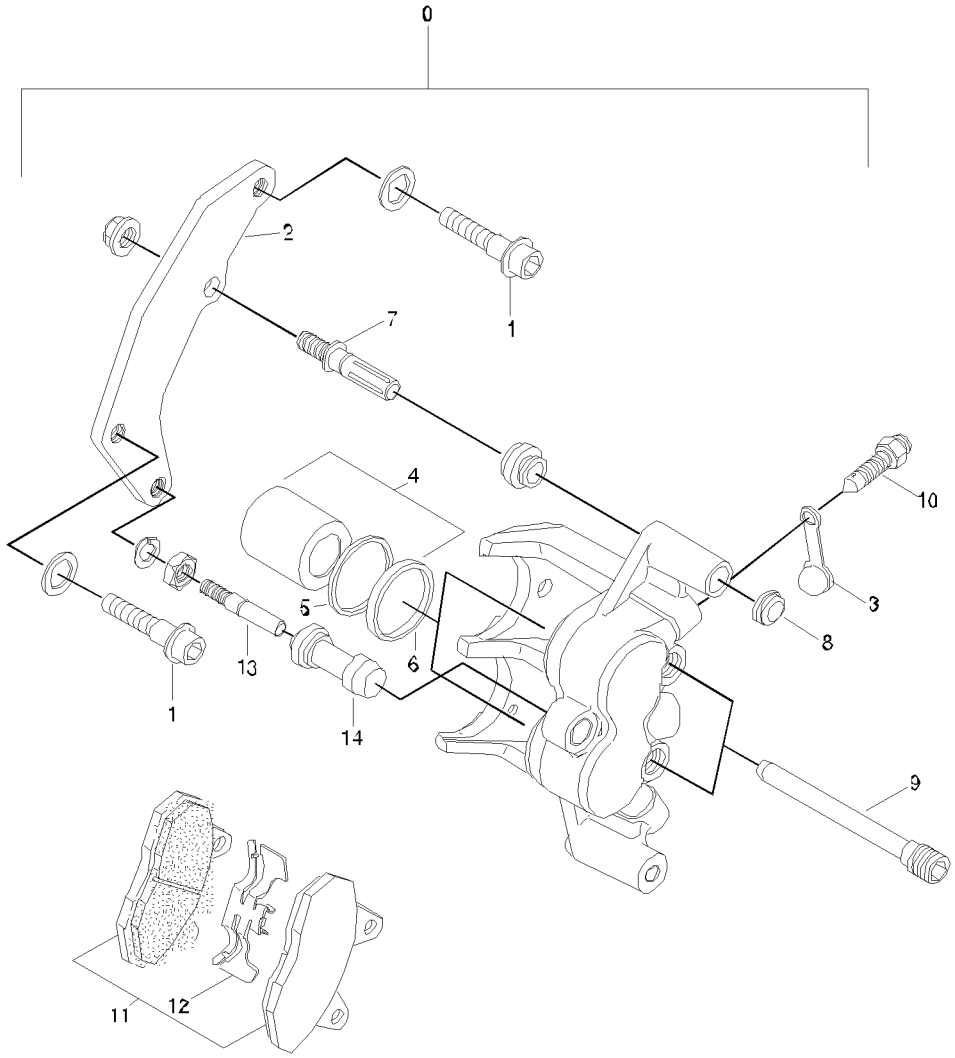

FIG. 41 CALIPER REAR

REF. No.	PARTS NUMBER	PARTS NAME	Q'TY
41-00	59300HG5100	CALIPER ASS'Y, rear	1
41-01	09103H08254	BOLT, calipers	2
41-02	59350HG5100	.CARRIER, caliper	1
41-03	59122HG5100	.CAP	1
41-04	59303HG5100	.PISTON SET, caliper	1
41-05	59107HG5100	.SEAL, piston	1
41-06	59308HG5100	.BOOT, pistom	1
41-07	59305HG5100	.AXLE No.1	1
41-08	59312HG5100	.BOOT	1
41-09	59302HG5100	.AXLE, caliper pad	2
41-10	59121HG5100	.BREATHER	1
41-11	59301HG5100	.PAD COMP, caliper	1
41-12	59315HG5100	.SPRING	1
41-13	59306HG5100	.AXLE No.2	1
41-14	59313HG5100	.INSULATOR, caliper	1

FIG. 42

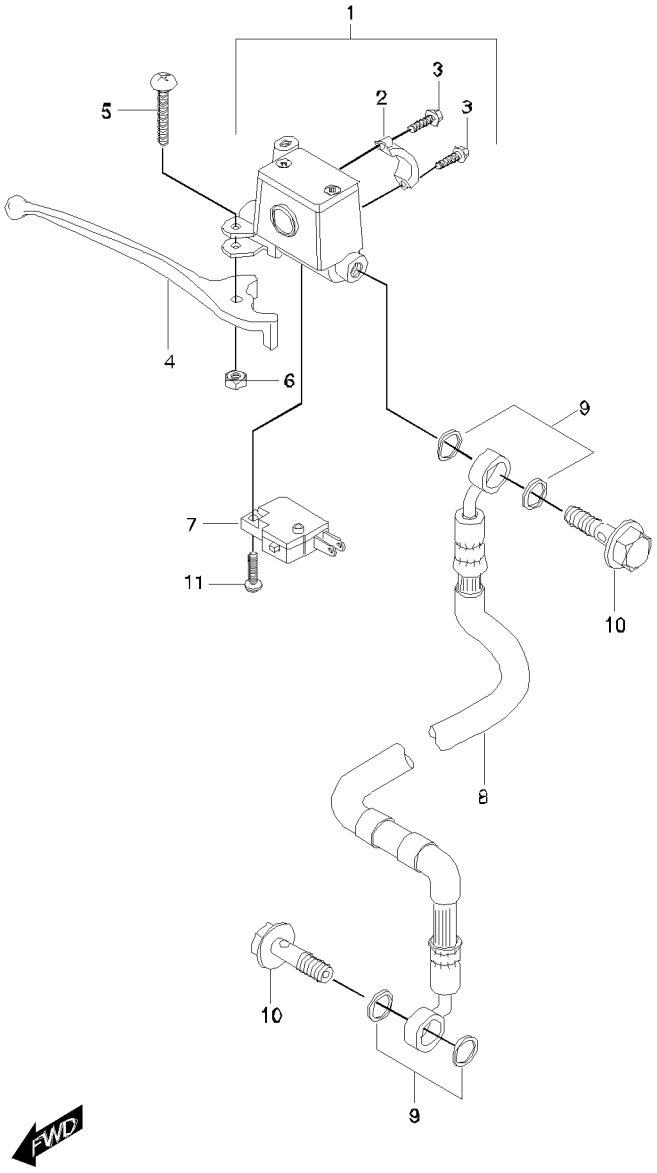

FIG. 42 FRONT MASTER CYLINDER

REF. No.	PARTS NUMBER	PARTS NAME	Q'TY
42-01	59600HL7300	CYLINDER ASS'Y, master	1
42-02	59671-35C00	.HOLDER, master cylinder	1
42-03	09360-10039	BOLT, front brake	2
42-04	57421HF4501	LEVER, brake front	1
42-05	57431-13010	SCREW, brake lever pivot	1
42-06	08319-21068	NUT, brake lever pivot(M6)	1
42-07	57460-17C00	SWITCH ASS'Y, stop	1
42-08	59480HL7300	HOSE COMP, front brake	1
42-09	09161-10005	WASHER, brake fluid	4
42-10	09360-10039	BOLT, brake fluid	2
42-11	02112-74108	SCREW, stop switch(M4x10)	1

FIG. 43

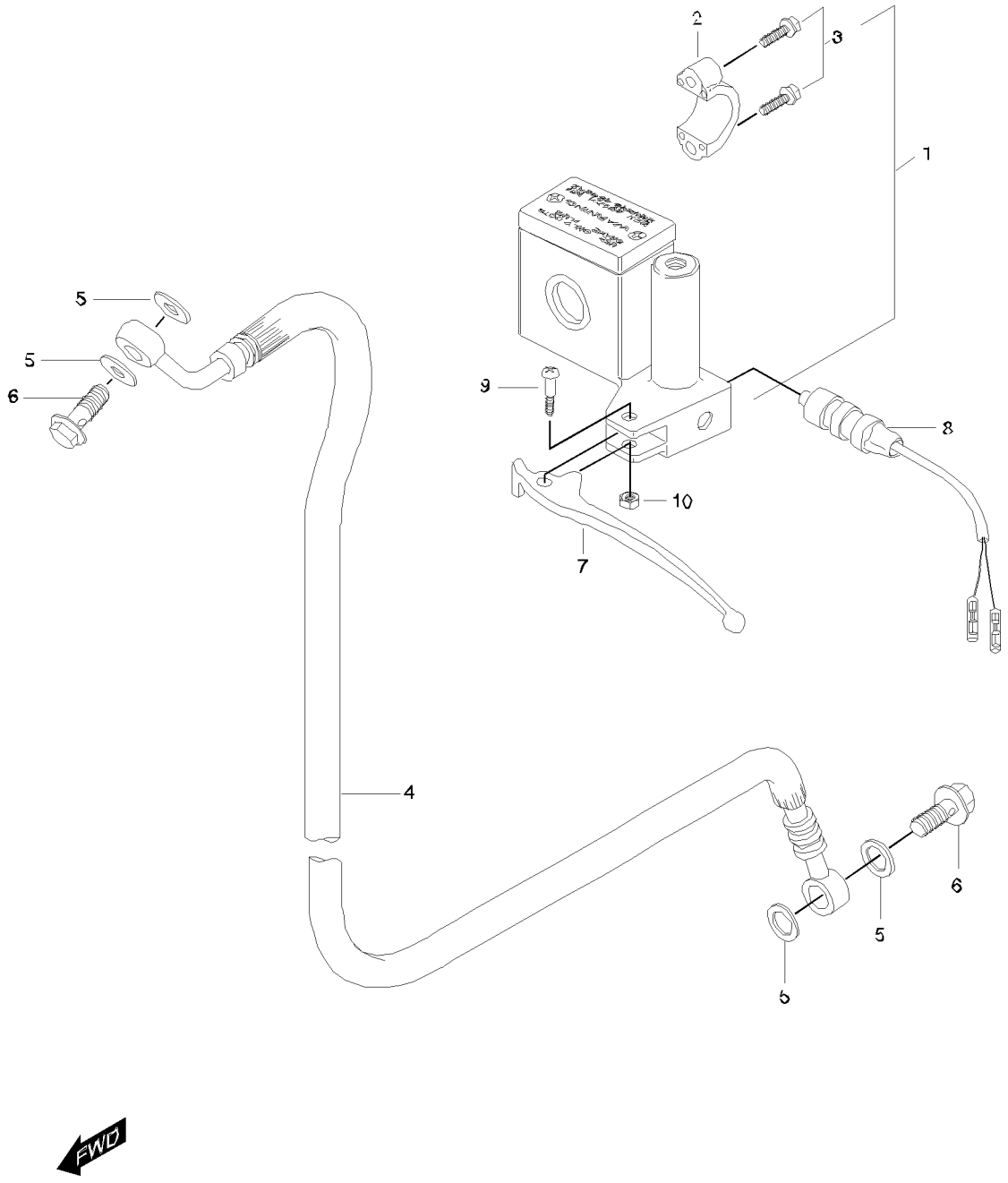

FIG. 43 REAR MASTER CYLINDER

REF. No.	PARTS NUMBER	PARTS NAME	Q'TY
43-01	69600HL7301	CYLINDER ASS'Y, master	1
43-02	59671-35C00	.HOLDER, master cylinder	1
43-03	09360-10039	.BOLT, ft brake	2
43-04	69480HL7300	HOSE COMP, rr brake	1
43-05	09161-10005	WASHER, brake fluid	4
43-06	09360-10039	BOLT, brake hose	2
43-07	57621HF4530	LEVER, brake rear	1
43-08	57460H11200	SWITCH ASS'Y, rear stoper	1
43-09	57431-13010	SCREW, rear brake lever pivot	1
43-10	08319-21068	NUT, rear brake lever pivot(M6)	1

FIG. 44

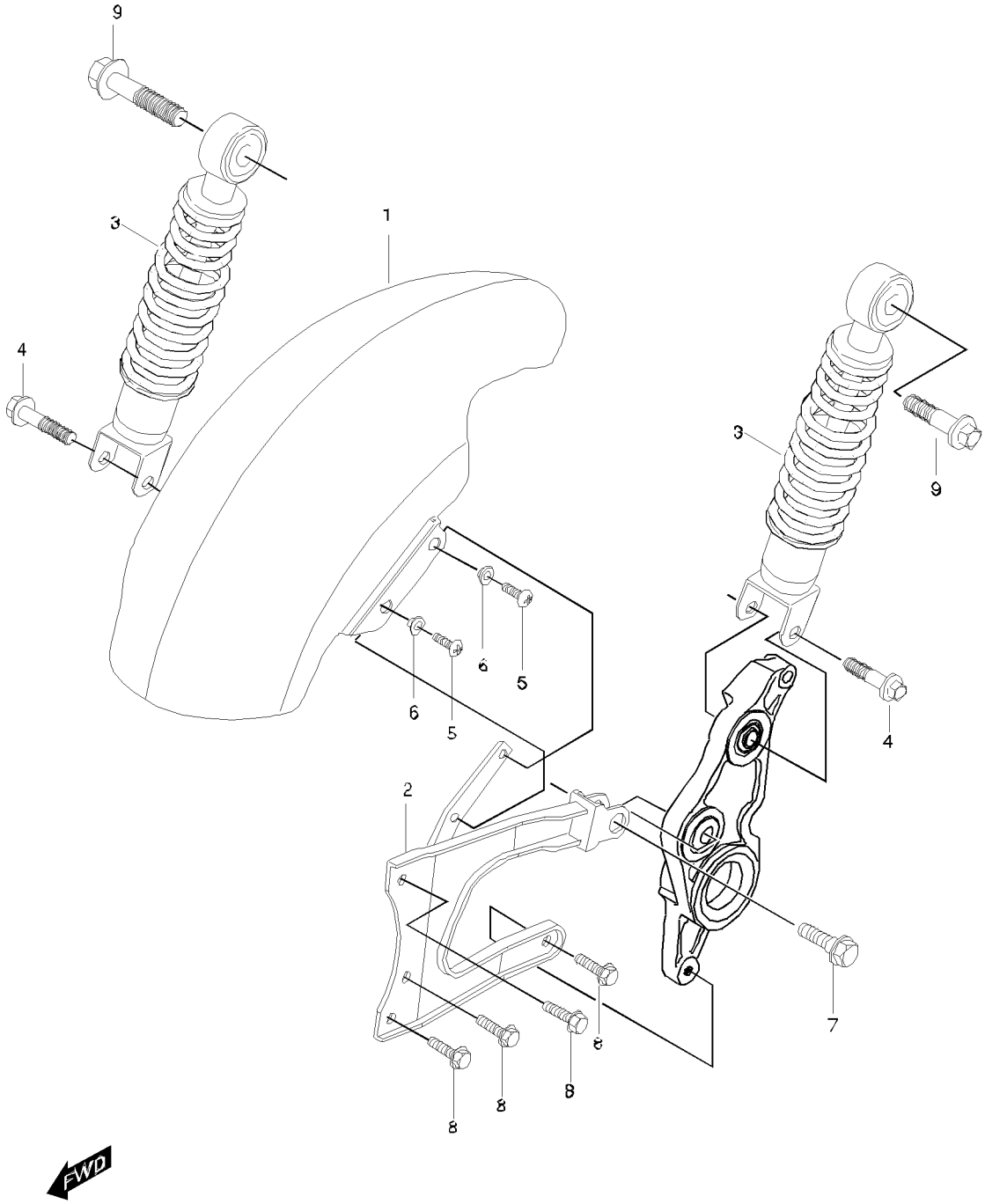

FIG. 44 REAR FENDER

REF. No.	PARTS NUMBER	PARTS NAME	Q'TY
44-01	63115HL7301	REAR, fender front	1
44-02	62320HF4531	BRACKET COMP, rear suspention arm	1
44-03	62100HL7300	ABSORBER ASS'Y, rear shock	2
44-04	01137-10358	BOLT, rear shock absorber lower(M10x35)	2
44-05	02142-06165	SCREW,rear fender front(M6x16)	2
44-06	09169-06034	WASHER,rear fender front	2
44-07	09103-10019	BOLT, rear sus arm & sus arm brkt	1
44-08	01514-08165	BOLT, braket comp rear suspention(M8x16)	4
44-09	01137-10406	BOLT, rear shock absorber upper(M10x40)	2

FIG. 45

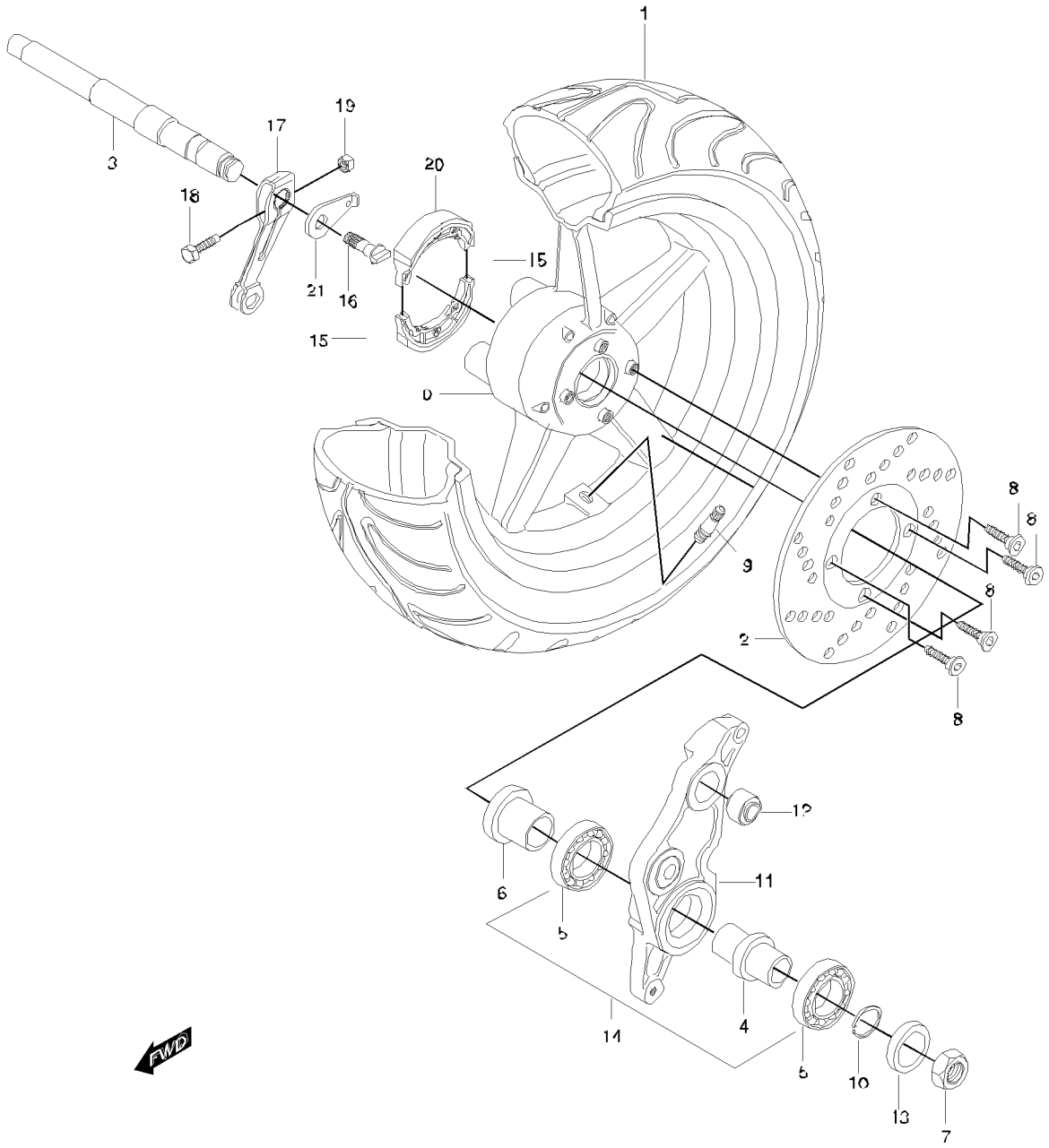

FIG. 45 REAR WHEEL

REF. No.	PARTS NUMBER	PARTS NAME	Q'TY
45-00	64150HL7300	WHEEL COMP, REAR	1
45-01	65109HF4500	TIRE,REAR(130/70-12 59J)	1
45-02	69211HF4530	DISC, rear brake	1
45-03	24141HF4531	SHAFT, rear axle	1
45-04	64751HL7300	SPACER, rear suspention arm NO.1	1
45-05	08130-60047	BEARING, rear suspention arm(6204DD)	2
45-06	64752HL7300	SPACER, rear suspention arm NO.2	1
45-07	09159H14008	NUT, rear axle	1
45-08	59421-03A01	BOLT, rear disc	4
45-09	55220-29C20	VALVE ASS'Y	1
45-10	08331-41429	CIRCLIP, rear sus arm	1
45-11	62311HL7302	ARM, rear suspention	1
45-12	09319-10032	BUSH, rear suspention arm	1
45-13	64753HL7300	SPACER, rear axle nut	1
45-14	62311HL7300HPA	ARM ASS'Y, rear suspention	1
45-15	09443H07001	SPRING	2
45-16	64441HF4500	CAM, rear brake	1
45-17	64451HF4500	LEVER, rear brake cam	1
45-18	09100-06139	BOLT, rear brake cam lever	1
45-19	08316-16068	NUT, rear brake cam lever(M6)	1
45-20	64400H41D00	SHOE SET, rear brake	1
45-21	64492HE7100	PLATE, drive lining indicator	1

FIG. 46

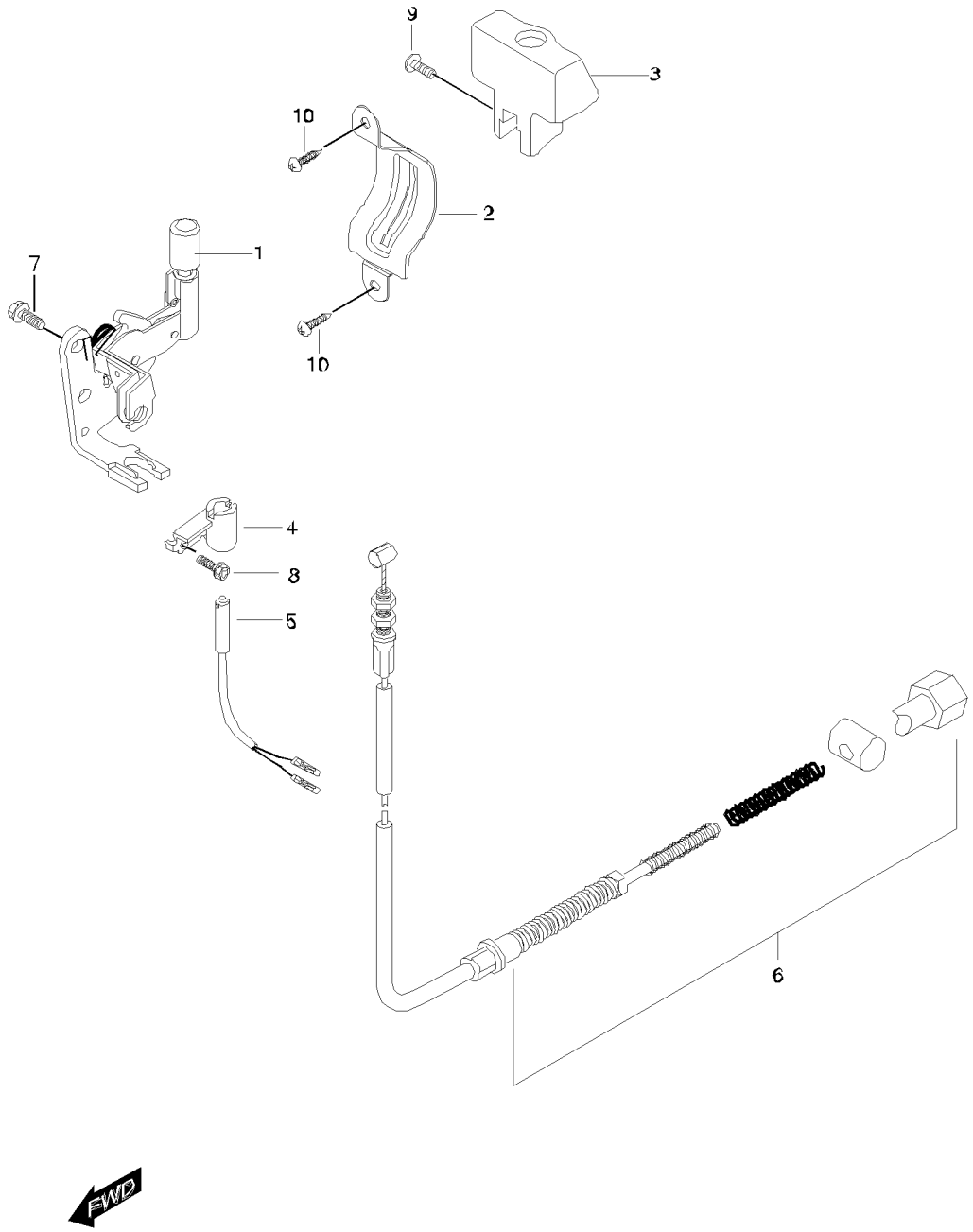

FIG. 46 PARKING BRAKE

REF. No.	PARTS NUMBER	PARTS NAME	Q'TY
46-01	57800HL7301	BODY ASS'Y, parking brake	1
46-02	57860HL7300	SEAL COMP, leg shield cover	1
46-03	57810HL7300	KNOB COMP, parking brake	1
46-04	57870HL7303	BRACKET COMP, parking brake switch	1
46-05	37290HL7300	SWITCH ASS,Y, parking brake	1
46-06	58800HL7300	CABLE ASS'Y, brake lock	1
46-07	01517-06166	BOLT, parking brake body	1
46-08	02112-05108	SCREW, stop switch bracket(M5x10)	1
46-09	02112-05108	SCREW, parking brake knob(M5x10)	1
46-10	03241-05106	SCREW, leg shield cover & seal(M5x10)	2